Journal of ELECTRICAL ENGINEERING, VOL. 55, NO. 1-2, 2004, 31–35

FOUR—LEGGED ACTIVE POWER FILTER COMPENSATION FOR A UTILITY DISTRIBUTION SYSTEM

Abdelaziz Chaghi — Amor Guettafi — Azzedine Benoudjit *

This paper presents a four-leg static converter to balance a three-phase four wire utility distribution system. The balancing strategy is based on a four-legged power converter used to provide a path for the neutral current due to an unbalanced load. The compensating technique uses a three-dimensional space vector modulation in the α-β-γ coordinate system. To validate the proposed approach, simulation results are presented and discussed.

K e y w o r d s: three-phase-four wire, active filter, harmonics, three dimension, space vector modulation

1 INTRODUCTION

Distribution systems will typically have a great deal of single-phase load connected to them. Therefore distribution systems are inherently unbalanced. The load is also very dynamic and varies with time, theses factors contribute to increase difficulties in controlling the distribution voltage within certain limits. In addition to this if the phases are unequally loaded, they produce undesired negative and zero sequence currents. The negative sequence will cause excessive heating in machines, saturation of transformers and ripple in rectifier [1, 2]. The zero sequence currents cause not only excessive power losses in neutral lines but also affect protection [3]. This may be undesirable or unacceptable for certain commercial and industrials users.

In order to avoid the problems caused through unbalanced voltages, it is important to balance the three phases voltages. The conventional solution using a passive compensator has been used as a solution to solve voltage unbalance problem [4], but this presents several disadvantages namely resonance can occur because of the interaction between the compensator and the load, with unpredictable results. To cope with these disadvantages, recent efforts have been concentrated in the development of active power filter [5, 6]. Using three-legged power converters to deal with unbalanced load and source has been addressed in [7, 8]. By engaging a feed forward control, the negative-sequence component caused by unbalanced source/load can be cancelled out so that the input power becomes a constant and the DC link voltage is free of low frequency even harmonic ripples. However, a three-legged power converter is incapable of dealing with zero-sequence unbalance. To solve the limitation, normally split DC link capacitors are used. The zero-sequence current path is provided by connecting the neutral point to the middle point of the two DC link capacitor [9]. The drawback of this scheme is that excessively large DC link capacitors are needed, therefore the cost is high, especially, for high voltage applications. To handle the zero-sequence component, the four-legged inverter [10] can substantially reduce the DC link capacitance.

The voltage balancing using a four-legged inverter under balanced and unbalanced load condition in three-phase four wires is proposed to consider zero sequence component and three-dimension space vector modulation is presented.

2 FOUR LEGGED INVERTER

The three-phase four-legged inverter system is shown in Fig. 1. Compared with the conventional 3-phase inverter, the additional fourth leg provides a return path for the load neutral point so that the zero-sequence component can be regulated. In a conventional balanced three-phase inverter, where an assumption of $X_a + X_b + X_c = 0$ is always made, only two variables are independent.

Variables in a-b-c coordinate X_{abc} can be expressed in α-β plane, however, when the fourth neutral leg is added to a conventional three-phase inverter to deal with the zero sequence load current, as shown in Fig. 1, the assumption of $X_a + X_b + X_c = 0$ is no longer valid. In the equation $X_a + X_b + X_c \neq 0$ the variables become three independent variables, and can be expressed as a vector X with orthogonal α-β-γ coordinates in a three dimensional space as given in (1):

$$\begin{bmatrix} X_\alpha \\ X_\beta \\ X_\gamma \end{bmatrix} = \frac{2}{3} \begin{bmatrix} 1 & -\frac{1}{2} & -\frac{1}{2} \\ 0 & \frac{\sqrt{3}}{2} & -\frac{\sqrt{3}}{2} \\ \frac{1}{2} & \frac{1}{2} & \frac{1}{2} \end{bmatrix} \begin{bmatrix} X_a \\ X_b \\ X_c \end{bmatrix} . \qquad (1)$$

In a balanced case where $X_a + X_b + X_c = 0$ is assumed, X_γ is equal to zero and can be left out. The neutral leg

* Laboratory "L.S.P-I.E" Department of Electrical Engineering, Faculty of Sciences Engineering, University of Batna, Rue Chahid M^{d} El Hadi Boukhlouf 05000, Batna – Algeria, E-mail of the first author: az_Chaghi@Yahoo.fr

ISSN 1335-3632

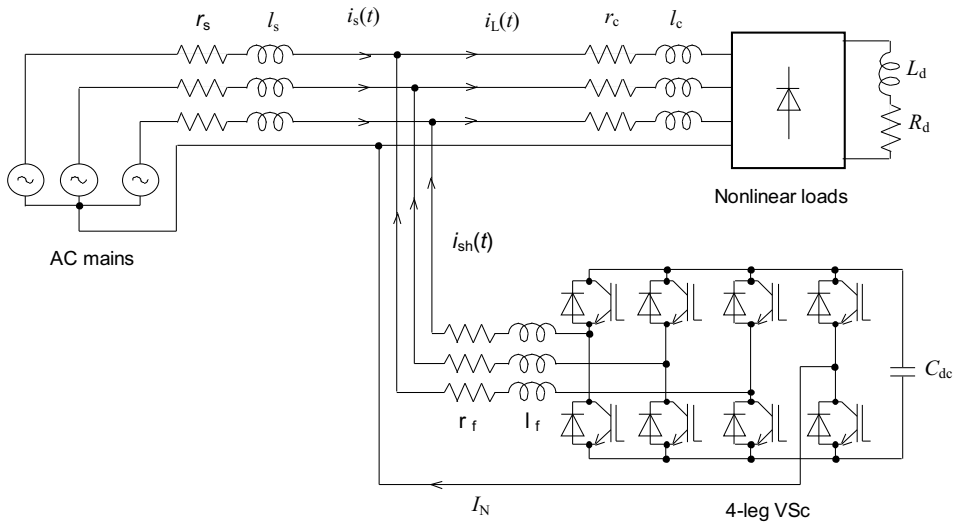

Fig. 1. Basic shunt compensation scheme using a 4-leg VSC

is no longer needed in such a case, which turns out to be a conventional three-phase inverter case.

3 3D SPACE VECTOR MODULATION

Space vector modulation for a four-legged inverter is based on the representation of the phase voltage space vectors in the $\alpha - \beta - \gamma$ plane as shown in Fig. 2. In the conventional inverter, there are eight possible switch combinations. With an additional leg, the total number of switch combinations increases to sixteen.

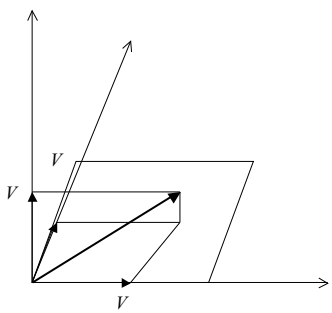

Fig. 2. Representation of topology (10000) in α-β-γ

The phase voltage V_{abc} can be presented in the orthogonal coordinate $\alpha - \beta - \gamma$ in the three dimensional space by applying (1). Thus, each switching combination can be represented with a space vector: $[X_\alpha \quad X_\beta \quad X_\gamma]^\top = \mathbf{T} \cdot [X_a \quad X_b \quad X_c]^\top$ where $\mathbf{T}$ is the transformation matrix:

$$\mathbf{T} = \frac{2}{3} \begin{bmatrix} 1 & -\frac{1}{2} & -\frac{1}{2} \\ 0 & \frac{\sqrt{3}}{2} & -\frac{\sqrt{3}}{2} \\ \frac{1}{2} & \frac{1}{2} & \frac{1}{2} \end{bmatrix} . \tag{2}$$

The projection of all space vectors in the α-β plane will result in the known hexagon of the conventional space vector modulation for three phase voltage source inverter as shown in Fig. 3.

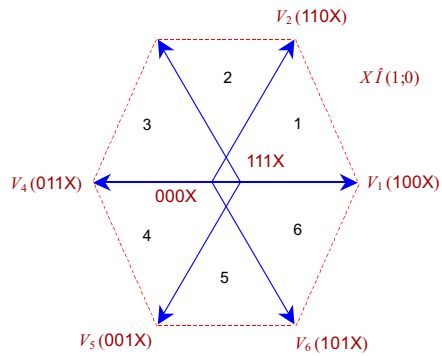

Fig. 3. Projection of the sixteen vector into α-β plane

Table 1 shows the 16 switching combinations and the corresponding voltages in α-β-γ coordinates. Distribution of the 16 switching vectors is shown in Fig. 4. There are two zero switching vectors (1111, 0000), and 14 non-zero vectors. These vectors form six prisms in the space, each prism can be defined by six non zero vectors and two zero vectors.

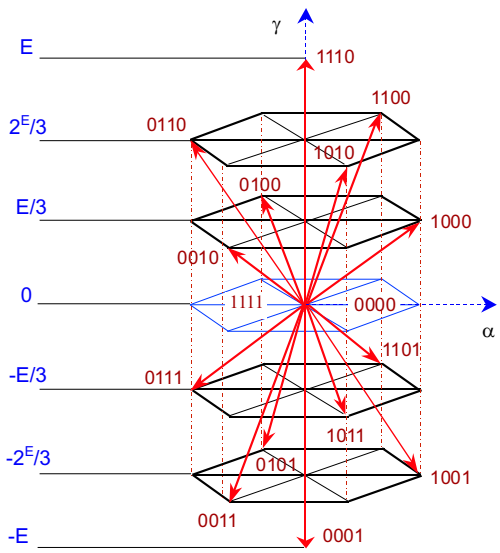

Fig. 4. Switching vectors of a three-phase four legged inverter

Table 1. Switching combination in the α-β-γ coordinates

Etats	V_α	V_β	V_γ
(1111)	0	0	0
(0001)	0	0	$-E$
(1001)	$\frac{2}{3}E$	0	$-\frac{2}{3}E$
(1101)	$\frac{1}{3}E$	$\frac{1}{\sqrt{3}}E$	$-\frac{2}{3}E$
(0101)	$-\frac{1}{3}E$	$\frac{1}{\sqrt{3}}E$	$-\frac{2}{3}E$
(0111)	$-\frac{2}{3}E$	0	$-\frac{1}{3}E$
(0011)	$-\frac{1}{3}E$	$-\frac{1}{\sqrt{3}}E$	$-\frac{2}{3}E$
(1011)	$\frac{1}{3}E$	$-\frac{1}{\sqrt{3}}E$	$-\frac{1}{3}E$
(1110)	0	0	E
(0000)	0	0	0
(1000)	$\frac{2}{3}E$	0	$\frac{1}{3}E$
(1100)	$\frac{1}{3}E$	$\frac{1}{\sqrt{3}}E$	$\frac{2}{3}E$
(0100)	$-\frac{1}{3}E$	$\frac{1}{\sqrt{3}}E$	$\frac{1}{3}E$
(0110)	$-\frac{2}{3}E$	0	$\frac{2}{3}E$
(0010)	$-\frac{1}{3}E$	$-\frac{1}{\sqrt{3}}E$	$\frac{1}{3}E$
(1010)	$\frac{1}{3}E$	$-\frac{1}{\sqrt{3}}E$	$\frac{2}{3}E$

Table 2. Switching variables used in the space vector

d_α	d_β	d_0	k	$e_\alpha(k)$	$e_\beta(k)$	$e_0(k)$
0	0	0	2	$\frac{e_{dc}}{\sqrt{6}}$	$\frac{e_{dc}}{\sqrt{2}}$	$2\frac{e_{dc}}{\sqrt{3}}$
0	0	1	13	$\frac{e_{dc}}{\sqrt{6}}$	$\frac{e_{dc}}{\sqrt{2}}$	$-\frac{e_{dc}}{\sqrt{3}}$
0	1	0	6	$\frac{e_{dc}}{\sqrt{6}}$	$-\frac{e_{dc}}{\sqrt{2}}$	$2\frac{e_{dc}}{\sqrt{3}}$
0	1	1	11	$\frac{e_{dc}}{\sqrt{6}}$	$-\frac{e_{dc}}{\sqrt{2}}$	$-\frac{e_{dc}}{\sqrt{3}}$
1	0	0	3	$-\frac{e_{dc}}{\sqrt{6}}$	$\frac{e_{dc}}{\sqrt{2}}$	$\frac{e_{dc}}{\sqrt{3}}$
1	0	1	14	$-\frac{e_{dc}}{\sqrt{6}}$	$\frac{e_{dc}}{\sqrt{2}}$	$-2\frac{e_{dc}}{\sqrt{3}}$
1	1	0	5	$-\frac{e_{dc}}{\sqrt{6}}$	$-\frac{e_{dc}}{\sqrt{2}}$	$\frac{e_{dc}}{\sqrt{3}}$
1	1	1	10	$-\frac{e_{dc}}{\sqrt{6}}$	$-\frac{e_{dc}}{\sqrt{2}}$	$-2\frac{e_{dc}}{\sqrt{3}}$

4 SYSTEM MODELLING AND CONTROL

The extension of the instantaneous active and reactive current component i_d–I_q method is based on the it original definition [7] plus the introduction of the zero sequence current component. In this method the APF currents ic_i are obtained by previous calculation on the mains voltage u_i and non linear load currents iL_i in a stationary reference frame, ie, in α-β-0 components by equation (1) and (2). Nonzero values are assumed for zero components in both voltage and current.

$$[C_{\alpha\beta\,0}] = \sqrt{\frac{2}{3}} \begin{bmatrix} 1 & 0 & \frac{1}{\sqrt{2}} \\ -\frac{1}{2} & \frac{\sqrt{3}}{2} & \frac{1}{\sqrt{2}} \\ -\frac{1}{2} & -\frac{\sqrt{3}}{2} & \frac{1}{\sqrt{2}} \end{bmatrix}, \tag{3}$$

$$[u_{\alpha\beta\,0}] = [C_{\alpha\beta\,0}]^\top \cdot [u_{123}]\,, \quad [il_{\alpha\beta\,0}] = [C_{\alpha\beta\,0}]^\top \cdot [il_{123}]\,. \tag{4}$$

In order to obtain the d_{q0} load current components a synchronous reference frame is used applying the transformation (4) where θ represent the instantaneous voltage vector angle.

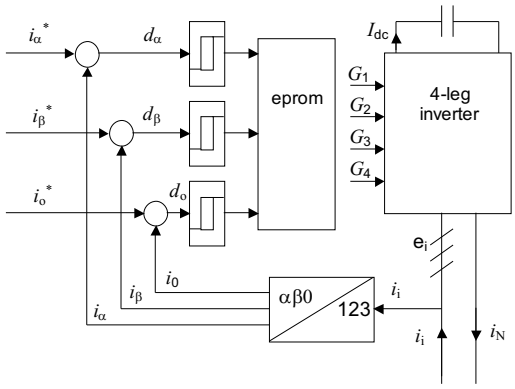

Fig. 5. Space vector based current controller for the 4-leg APF

$$\begin{bmatrix} i_{ld} \\ i_{lq} \\ i_{l0} \end{bmatrix} = \begin{bmatrix} \cos\theta & \sin\theta & 0 \\ -\sin\theta & \cos\theta & 0 \\ 0 & 0 & 1 \end{bmatrix} \begin{bmatrix} il_\alpha \\ il_\beta \\ il_0 \end{bmatrix}. \tag{5}$$

Decoupling between $\alpha\beta$ and zero sequence voltage components allows to obtain a transformation which is a function of only two variables. Then performing the elimination of average current components by high-pass filters the currents that should be compensated are obtained.

$$ic_d = -\tilde{i}_{ld}\,, \quad ic_q = -\tilde{i}_{lq}\,, \text{ and } i_0 = -il0\,.$$

Finally the converter currents in phase co-ordinates can be determined as indicated by (4)

$$\begin{bmatrix} ic_\alpha \\ ic_\beta \\ ic_0 \end{bmatrix} = \frac{1}{\sqrt{u_\alpha^2 + u_\beta^2}} \begin{bmatrix} u_\alpha & -u_\beta & 0 \\ u_\beta & u_\alpha & 0 \\ 0 & 0 & \sqrt{u_\alpha^2 + u_\beta^2} \end{bmatrix} \begin{bmatrix} ic_d \\ ic_q \\ ic_0 \end{bmatrix}. \tag{6}$$

A). Current control

The APF based on the 4-leg VSC topology is presented in Fig. 4. Variable $g_i(k)$, where $i = 1, 2, 3$ stand for the phase number and k is the VSC state number, are the switching functions. A value $g_i(k) = 0/1$ means that the lower/upper IGBT is conducting. Obviously, in any leg, the IGBT's conduction is non simultaneous .The variable $g_4(k)$ is also a switching function, related with the fourth leg which is connected to the neutral wire. The 4-leg VSC topology enable to generate sixteen, $k = (0, \ldots, 15)$ voltage space vectors, $e_{\alpha\beta0}(k)$. The current control in the APF is achieved with space vector based current controller shown in Fig. 5. This current controller is implemented with hysteresis comparators acting in the current errors.

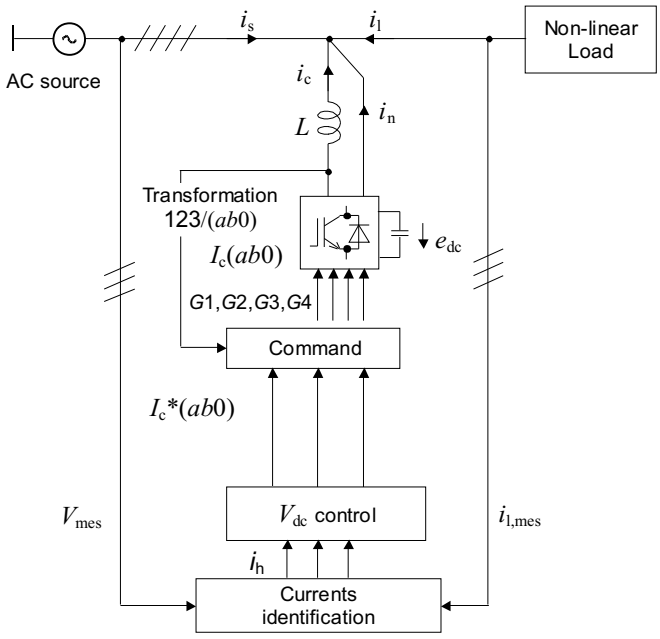

Fig. 6. Active power filter control circuit based on a 4-leg VSC

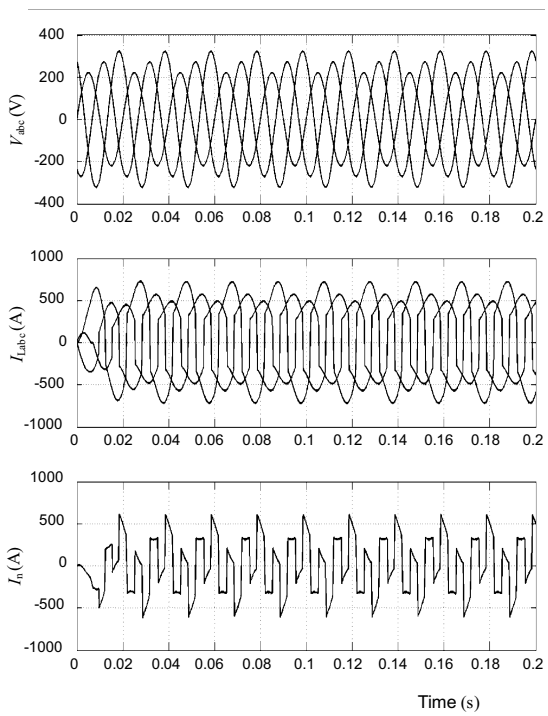

Fig. 7. Before compensation V_{abc}: load voltage, I_{abc}: load currents, I_N: neutral current

Table 2 presents the switching variables $d_{\alpha\beta 0}$, VSC state number and voltages, $e_{\alpha\beta 0}(k)$ used in the space vector based current controller for the 4-leg VSC. Using this control strategy only eight $(k = 2, 3, 5, 6, 10, 11, 13, 14)$ of sixteen possible states are used. However, there is always an approximated state k, that satisfy all the voltage components required. The three-phase 4-wire APF control circuit proposed in Fig. 6, is based on the above VSC topology. The space vector based current control is used to achieve the current injection of the reference currents $ic^*_{\alpha\beta 0}$ or ic^*_{dq0}.

B). DC Voltage control

Assuming that the active power flow between mains and the VSc is equal to the active power in the Dc side, ie, neglecting zero sequence power, losses in the inductance and switching devices, the state equation for capacitor voltage is:

$$C \cdot e_{dc} \cdot \frac{\mathrm{d}e_{dc}}{\mathrm{d}t} = p \tag{7}$$

where

$$p = v_1 i_{1h} + v_2 i_{2h} + v_3 i_{3h} \tag{8}$$

therefore considering the variable K_P and K_i as the proportional and integrator gains of the PI controller, the state equation for capacitor becomes:

$$\frac{\mathrm{d}e_{dc}}{\mathrm{d}t} = \left(K_p + \frac{K_i}{s}\right)\left(e^*_{dc} - e_{dc}\right)\frac{v_1^2 + v_2^2 + v_3^2}{Ce_{dc}}\,, \tag{9}$$

$$\frac{\mathrm{d}e_{dc}}{\mathrm{d}t} = \left(K_p + \frac{K_i}{s}\right)\left(e^*_{dc} - e_{dc}\right)\frac{3v_1^2}{2Ce_{dc}}\,. \tag{10}$$

The simplified transfer function is

$$\frac{e_{dc}}{e^*_{dc}} = \frac{3}{2}\frac{v_1^2}{Ce_{dc}}K_p\frac{s + (K_i/K_p)}{s^2 + 2\cdot\xi_e w_{ne} s + w_{ne}^2}\,. \tag{11}$$

The design of the PI controller is realised verifying that is a prototype second-order system. The variable values considered are damping ration $\zeta = \sqrt{2}/2$, a natural undamped frequency $\omega_n = \omega/5$, a capacitor $c = 4.4$ mF, a DC voltage $e_{dc} = e^*_{dc} = 840$ V and a mains voltage $U = 220$ V.

$$K_p = \frac{2\sqrt{2}Ce_{dc}}{3V_1^2} \quad \text{and} \quad K_i = \frac{2Ce_{dc}}{3V_1^2}w_{ne}^2\,. \tag{12}$$

5 SIMULATION RESULTS

In the simulations the non-linear load is composed of 3 independent single-phase bridge rectifiers connected between each phase and neutral wire and with a parallel RL load. As it can be observed in Figures 8 and 9 before and after compensation.

The dynamic response of the control strategy (and overall active power filter) is studied by switching the three single phase inverter feeding unbalanced load with the same commutation angle: $\alpha = 30°$, under the following parameters:

Ac source 220V/50 Hz, $R_s = 1.2\,\mathrm{m}\Omega$, $L_s = 32.8\,\mu\mathrm{H}$,
$R_c = 2.6\,\mathrm{m}\Omega$, $L_c = 25\,\mu\mathrm{H}$,
$R_{L1} = 0.2\,\Omega$, $L_{L1} = 1$ mH, $R_{L2} = 0.66\,\Omega$,
$L_{L2} = 2.6$ mH and $R_{L3} = 3\,\Omega$, $L_{L3} = 4$ mH

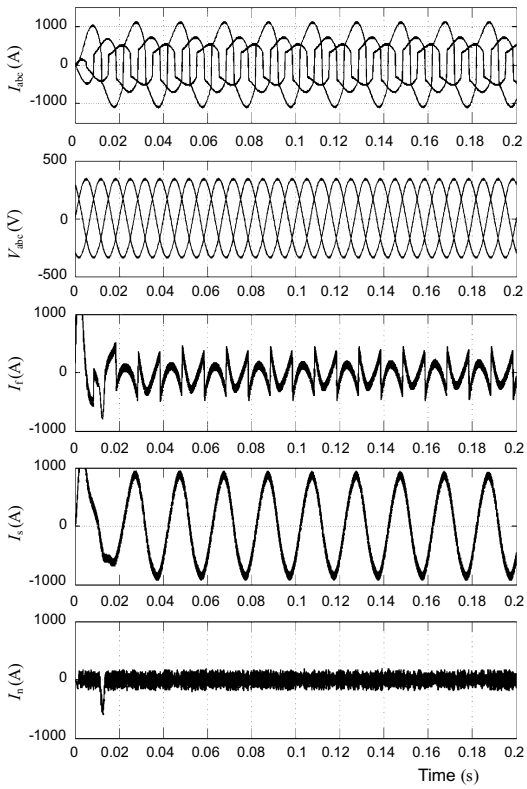

Fig. 8. After compensation l_{abc}: load currents, V_{abc}: load voltage, I_f: compensation current in phase A, I_{sa}: line current, I_N: neutral current

Figure 6 shows a number of selected simulation results in the unbalance case of utility voltage before and after compensation. As can be seen the neutral current is compensated and line voltage balanced.

6 CONCLUSION

In this papers a four-legged inverter is proposed to handle the neutral current due to unbalanced load in a three-phase four wire system. Three-dimension space vector modulation schemes proposed for the four-legged power inverter are investigated.

It has been shown that the neutral current can be controlled to achieve load voltage balancing. The validity of the modelling, analysis and control method of the proposed four legged inverter is proved by computer simulation. Simulation results show that the four legged inverter is capable of compensating the voltages in three-phase four- wire systems.

References

[1] ENJETI, P. N.—SHIREEN, W.—PACKEBUSH, P.—PITEL, I. J.: Analysis and Design of a New Active Power Filter to Cancel Neutral Current Harmonics in Three-Phase Four Wire Electric Distribution Systems, IEE Trans. Ind. Appl, Vol. 30, No. 6, Nov/Dec. 1994, 1565–1572.

[2] QUIN, C. A.—MOHAN, N.: Active Filtering Harmonic Currents in Three-Phase Four-Wire Systems with Three-Phase and Single Non-Linear Loads, IEE-APEC'92, Appl. Power Electronics Conf, 1992, 829–836.

[3] QUIN, C. A.—MOHAN, N.—MELITA, H.: A Four-Wire Current Controlled Converter Provides Harmonic Neutralisation in Three-Phase-Four Wire Systems, IEE-Apec'93 Appli. Power Electronics Conf, 1993, 841–846.

[4] WILLIAMS, J. E.: Operation of Three-Phase Induction Motors on Unbalanced Voltages, AIEE, Transaction on Power Application Systems, Vol. 73, 1954, 125–133.

[5] BHAVARAJU, V. B.—ENJETTI, P. N.: An Active Line Conditioner to Balance Voltage in a Three-Phase System, IEEE Transaction on IA 32, 1996, 287–292.

[6] ROPPER, R. D.—LEEDHAM, P. J.: A Review of the Causes and Effects of Distribution System Three-phases Unbalance, IEE Conference on Sources and Effects of Power System Disturbances, No. 10, 1974, 147–152.

[7] MILLER, T. J. E.: Reactive Power Control in Electric Systems, John Willey & Sons, New-York, 1982.

[8] VERDELHO, P.—MARQUES, G.: An Active Power Filter and Unbalanced Current Compensator, IEEE Trans. Ind. Electronics, Vol. 44, No. 3, June 1997, 321–328.

[9] SINGH, B.—Al-HADDAD, K.—CHANDRA, A.: Active Power Filter for Harmonics and Reactive power, Compensation in Three-Phase, Four-Wire System Supplying Non-Linear Loads, ETEP-Eur. Trans. Elec. Power Eng, Vol. 8, No 2, March/April 1998, 139–145.

[10] MORAN, L.—MORA, E.—WALLACE, R.—DIXON, Y. J.: Performance Analysis of Power Factor Compensator which Simultaneously Eliminates Lines Current Harmonics, IEEE Power Electronics Specialist Conference, PESC'92, Toledo, Espana.

[11] AKAGI, H.—KANAZWA, Y.—NABAE, A.: Generalised Theory of Instantaneous Reactive Power in Three Phase Circuits, IPEC'83-Int.Power Electronics Conf, Tokyo, Japan, 1983, 1375-1386.

[12] QUIN, C.—MOHAN, N.: Active Filtering of Harmonic Currents in Three-Phase Four-Wire System with Three-Phase and Single-Phase non Linear Loads, APEC'92, 1992, 829–836.

[13] VERDELLO, P.—MARQUES, G. D.: Four Wire Active Power Filter Control Circuit With Phase-Looked Loop Phase Angle Determination, Power Electronics Variables Speed Drives, 21–23 September 1998, Conference Publication No 456, 34–39.

Received 18 August 2003

Abdelaziz Chaghi received his BSc degree from the University of Oran, Algeria 1980, and MSC from the University of Manchester, England 1984. He is Currently a Lecturer at the department of Electrical Engineering at Batna University. His areas of interest include power systems optimisation, harmonics, and power quality.

Amor Guettafi received his BSc degree from the University of Algiers, Algeria 1981, and PhD from the University of Paris, France 1988. His areas of interest include power systems and machines, harmonics, and power quality. He is Currently a Lecturer at the department of Electrical Engineering at Batna University and is Actually president of scientific at the same department

Azzedine Benoudjit received his BSc degree from the University of Algiers, Algeria 1975, and MSC from the University of Birmingham, England 1988 and received his PhD From Batna University , Algeria 1999. He is a Lecturer at the department of Electrical Engineering at Batna University. He is the principal founder of the department of Electrical Engineering at Batna. His areas of interest include power systems and Electrical Machines, Static converters, and power quality.