Journal of ELECTRICAL ENGINEERING, VOL. 57, NO. 1, 2006, 3–11

ARTIFICIAL NEURAL NETWORK BASED TURBINE FAST VALVING FOR ENHANCEMENT OF POWER SYSTEM TRANSIENT STABILITY

Ramnarayan Patel * — **Krishnan V. Pagalthivarthi** **

Fast valving is one of the effective and economic means of improving the stability of a power system under large and sudden disturbances. Conventional schemes of fast valving generate a fixed valve stroke sequence for the control of turbine valves under transient conditions. A simple fixed valve control sequence cannot give optimum result for different fault conditions and loading levels, due to its poor adaptability. This paper presents an artificial-neural-network (ANN) based controller to govern the operation of the turbine control valves and intercept valves under different fault conditions. A quasi-optimal scheme based on the generator speed deviation and accelerating power generates the valve control sequences under different fault cases. These sequences are used to train the ANN-based controller for known fault cases. The controller then decides the valve timings for any unknown fault case based on the controller inputs. The simulation results show that an ANN-based controller has very good generalization capability. The results are compared with the conventional schemes of fast valving control. The trained ANN controller gives satisfactory stability performance for a variety of conditions.

K e y w o r d s: fast valving, transient stability, artificial neural networks, back propagation

1 INTRODUCTION

Fast valving is one of the effective and economic means of improving the stability of a power system under large and sudden disturbances. Fast valving schemes involve rapid closing and opening of turbine valves in a prescribed manner to reduce the generator acceleration following a severe fault [1]. For maximum gains with fast valving, the turbine driving power should be reduced as rapidly as possible. Although the principle of fast valving as a stability aid was recognized in the early 1930s, the procedure has not been very widely applied for several reasons. Among them are the concerns for any possible adverse effects on the turbine and energy supply system. Since the mid-1960s, utilities have realized that fast valving could be an effective method of improving system stability. A number of technical papers have been published describing the basic concepts and effects of fast valving [2]. Some of the practical implementations [2] include, sustained fast valving applied to Tennessee Valley Authority's (TVA's) watts bar nuclear units, fast valving at TVA's Cumberland steam plant and fast valving applications at American Electric Power's (AEP's) Rockport plants. Fast valving techniques are very useful in the situations of severe faults, stuck-breaker and fast load rejection.

Fast turbine valving can be classified into two general categories — temporary and sustained [1]. To accomplish either of these, the control and/or intercept valves must be closed rapidly. With temporary valving, the control and/or intercept valves are permitted to reopen to their original operating position, allowing the driving power to return to the pre-fault value very shortly after a predetermined minimum is achieved. For sustained valving on the other hand, after the initial closure of the control valves, the opening of the valves is adjusted so that the post-fault driving power is reduced to a new unit level [3]. In addition, boiler controls must be adjusted to maintain system pressure and temperature within acceptable limits. In one of the commonly used schemes, only the intercept valves are rapidly closed and then re-opened after a short time delay. Since the intercept valves control nearly 70% of the total unit power [1, 4–7], this method results in a fairly significant reduction in turbine power. Sustained fast valving (SFV) necessarily associates with the partial closure of control valves. It should be noted that fast valving is applicable only to thermal generating units.

Conventional schemes of fast valving generate a fixed valve stroke sequence for the control of turbine valves under transient conditions. A typical valve stroke characteristic curve for a whole cycle of fast valving operation is depicted in Fig. 1. This is also known as Fixed Logic Control (FLC). The conventional scheme suffers the problem of poor adaptability for different fault conditions and at different loading levels of a power system [8]. During the past two decades various schemes have been proposed to improve upon the generalization capability of fast valving techniques. With the advent of various intelligent tools, the capability of turbine valve control schemes has been

* Department of Electrical Engineering, Indian Institute of Technology, Roorkee Roorkee (India), 247667 (Uttaranchal), Email: ramnpfee@iitr.ernet.in

** Department of Applied Mechanics, Indian Institute of Technology, Delhi, New Delhi (India), 110016, Email: kvp@am.iitd.ernet.in

ISSN 1335-3632

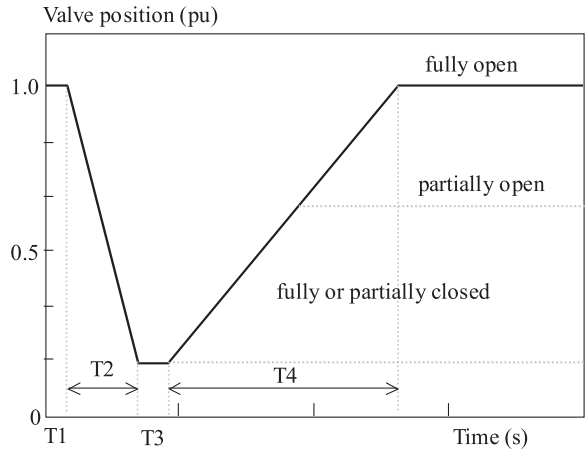

Fig. 1. Valve stroke characteristic curve in a conventional Fixed Logic Control (FLC), $T1$ = delay between time of initiation and time when the valve begins to close, $T2$ = valve closing time, $T3$ = time during which the valve remains closed, $T4$ = valve-opening time)

increased significantly in improving the transient stability performance of the power systems [2].

Fast valving is a technique that is applied only in case of severe faults. The amount of valving should match the severity of the fault. Many fast valving applications have proved that a turbine-generator system tends to lose synchronism in the second swing if the characteristic curve designed to handle more severe faults is used for a less severe one. Moreover, if the characteristic curve designed for minor faults is used for a severe one, the system often loses synchronism in the first swing [9]. Therefore, it is very critical to choose a feasible control scheme that can identify the fault situation accurately, so as to apply appropriate control.

This paper presents an artificial-neural-network (ANN) based controller to govern the operation of the turbine control and intercept valves under different conditions of fault and loading. Quasi-optimal control logic, based on the generator speed deviation and accelerating power, generates the valve control sequences under a variety of fault conditions. These sequences are further used to train the ANN-based controller. A multilayer feed-forward neural-network controller has been investigated. The power system model and the associated control logic have been simulated using MATLAB/Simulink.

The organization of the main body of the paper is as follows. Section 2 presents the motivation behind the work; it also explains how the preliminary data set is obtained for the training of the neurons. Section 3 presents the architecture and characteristic of the proposed ANN controller. This is followed by Section 4, which gives the illustrative power system example under study; preliminary system data for the system are given in appendices. Section 5 presents the comparative results with the ANN controller with that of the conventional fixed logic controller and other control strategies. Section 6 gives the concluding remarks.

2 MOTIVATION BEHIND THE WORK

Generator accelerating power and the rotor angular speed deviations are the two most commonly used signals in power system transient-stability controls. In the control of dynamic braking resistors (with a view to enhance the transient stability performance) the use of these signals is a common practice. In previous works [10–11] the rate of change of kinetic energy (RACKE) of the rotor mass and the rotor angular speed deviation signals are effectively used to decide the best sets of insertion and removal times of the brakes. The generator swing equation can be written in its simplest form as below:

$$\frac{2H}{\omega_0}\frac{\mathrm{d}^2\delta}{\mathrm{d}t^2} = P_m - P_e = P_a = \text{accelerating power of the machine} \quad (1)$$

Where,

P_m = mechanical driving power input, in pu
P_e = electrical power output, in pu
H = inertia constant, in MW-s/MVA
ω_0 = nominal speed, in electrical radian/sec.
δ = rotor angle, in electrical radian.

The equation describing the kinetic energy of a machine can be written as:

$$\mathrm{KE} = {}^1\!/_2(M\omega^2)\,. \quad (2)$$

The angular speed ω in Eq. (2) is the speed of the synchronous machine. The steady state speed is represented as ω_0, and this increases during a disturbance. Differentiating Eq. (2) with respect to time gives,

$$\mathrm{RACKE} = M\omega(\mathrm{d}\omega/\mathrm{d}t)\,. \quad (3)$$

The swing equation *ie* Eq. (1) may be written as:

$$M(\mathrm{d}\omega/\mathrm{d}t) = P_a\,. \quad (4)$$

From Eqs. (3) and (4), it is apparent that:

$$\mathrm{RACKE} = \omega P_a\,. \quad (5)$$

Al-Azzawi *et al* [10–11] established a criterion for effective insertion and removal of a braking resistor. From equation (1), it is clear that the decrease in the mechanical driving power has the same impact on the rotor angle swings as that of increase in the electrical power output. The switching in of a braking resistor (alternatively mentioned as "brake" in this paper) has the similar effect as the closing of the turbine valves and the same can be said about the switching off the resistor and opening of the turbine valves. This gives the motivation to extend

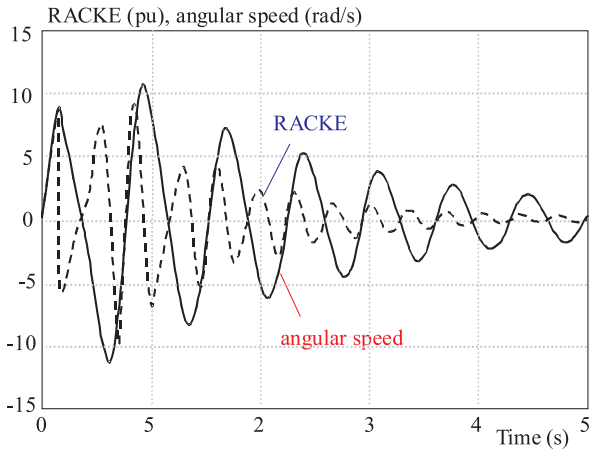

Fig. 2. RACKE and rotor angular speed

the control logic for braking resistors, to the fast valving schemes. Here the added advantage is that the fast valving can be applied from the very beginning of the fault period unlike the dynamic brake (which is ineffective on low system voltage profiles following a fault). This results in a more effective control over the rotor acceleration. Al-Azzawi's strategy [10–11], when extended to govern the fast valving schemes can be summarized as below:

Valve Closing Criterion:

$$(\text{RACKE})_I = 0 \text{ and } \Delta\omega_I = 0\pm\uparrow\ . \tag{6}$$

Where, $\Delta\omega_I$ is the angular speed deviation of the rotor of generator i and $0\pm\uparrow$ means that the variable is zero while changing sign from negative to positive.

Valve Opening Criterion:

$$(\text{RACKE})_I = 0 \text{ and } \Delta\omega_I = 0\pm\downarrow\ . \tag{7}$$

Where, $0\pm\downarrow$ means that the variable is zero while changing sign from positive to negative.

The above-mentioned scheme is termed in this paper as "semi-optimal" or "quasi-optimal" scheme; as it cannot discriminate the large disturbances from small ones, as will be discussed through the results. A typical variation of the angular speed and RACKE is given in Fig. 2; which shows the normal trend for a generator in any power system. A close look of Fig. 2 reveals that the frequency of variation of RACKE is twice that of the angular speed deviation. Therefore, the valve closing as represented by Eq. (6) can be initiated when the machine angular speed deviation has a positive value and similarly the valve opening can be initiated when the machine angular speed deviation turns from positive to negative; this will be evident from Eq. (7) and Fig. 2. Thus, for all practical purposes the angular speed deviation can be used to guide the opening and closing of the turbine valves. This further simplifies the control strategy and minimizes the measuring and computational requirements. If we apply the criterion discussed above to determine the closing and opening instants of turbine valves, we will get the parameters of valve stroke. Normally, the valve closing and opening rates are constants, depending on the design characteristics (and hence T1 and T2 in Fig. 1). A set of valve stroke parameters for known fault cases, are used to train the ANN controller so as to predict these parameters for an unknown case. When the acceleration is within a certain lower limit, the operation of the fast valving scheme may not be necessary, as it is meant only for the severe faults. An ANN controller can easily incorporate this and any other specific requirements of the system. The ANN controller will consider the severity of the faults and fault location, based on the magnitude and trend of the controller inputs. The controller input variation also takes care of other major contingencies, such as partial or full load rejection for short intervals.

In a previous work on fast valving control by ANN [8], the training data were obtained based on the experience. The system studied was also a simpler case of a single-machine infinite bus system. In the present work a multi-machine power system has been considered, where many possibilities of fault locations exist. The preliminary training data sets for the ANN controller are obtained here with the help of control strategy discussed above.

3 CHARACTERISTICS AND STRUCTURE OF THE ANN CONTROLLER

There are many different ANN structures and the training algorithms. One of the most suitable networks for the fast valving application is the multilayer feedforward neural network with backpropagation algorithm. This can learn an arbitrary continuous function from the function samples without prior knowledge about the function. Meanwhile, there exist a large number of design choices, including the number of layers, interconnections, processing units, learning constants and data representation to cater to the requirements of a particular application. The general function approximation capability and flexibility of this ANN are key justifications for it to be used in solving the fast valving control problem.

Care should be taken for the selection of input variables to the ANN, so that the faults at different locations can be distinguished based on these and also that these signals should be easy to sense and acquire. In present design three signals are taken as primary inputs. These are, the generator accelerating power P_a, the rotor angular speed deviation $\Delta\omega$ and the fault clearing time (FCT). Although the FCT is concerned with the design characteristics of the power system components (the inherent dead time of relays, circuit breakers etc.), the severity of the fault is very much affected by it and so it has direct impact on the amount of valving required. Its inclusion as controller input is to ascertain the necessity of fast valving for a particular case and to determine the desired valve stroke characteristic for a typical range of fault clearing time. With the advent of modern circuit breakers the FCT varies widely depending on the type of the breaker.

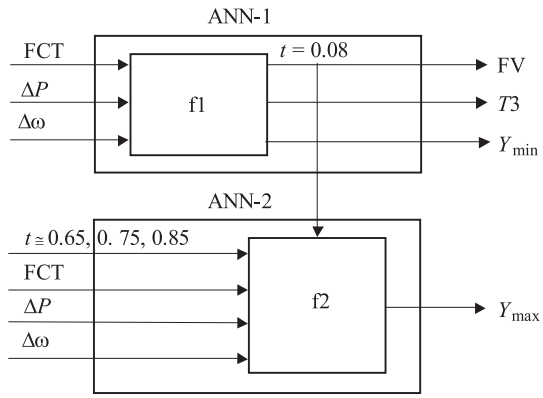

Fig. 3. Block diagram of the proposed ANN controller

Table 1. Architecture of the proposed ANN controller

ANN-1			ANN-2		
Layer	Neuron Transfer function	No. of neurons	Layer	Neuron Transfer function	No. of neurons
Hidden -1	tansig	5	Hidden -1	tansig	10
Hidden -2	logsig	10	Hidden -2	purelin	5
Hidden -3	purelin	5	Output	logsig	1
Output	logsig	3			

Table 2. Comparison between the target outputs and the outputs of trained ANN

Fault location	FCT (sec.)	Target output* FV	Target output* T3 (sec.)	Target output* $Y_{\max}$	ANN output* FV	ANN output* T3 (sec.)	ANN output* $Y_{\max}$
P1	0.14	0	–	–	0	–	–
P1	0.15	1	0.242	0.571	0.998	0.242	0.570
P1	0.18	1	0.250	0.550	0.998	0.248	0.550
P1	0.19	1	0.282	0.573	1	0.282	0.573
P1	0.20	1	0.250	0.567	1	0.249	0.567
P1	0.21	1	0.530	0.400	1	0.530	0.399
P2	0.28	0	–	–	–	–	–
P2	0.29	1	0.170	0.385	1	0.169	0.385
P2	0.30	1	0.175	0.388	1	0.176	0.387
P2	0.31	1	0.197	0.383	1	0.196	0.383
P2	0.32	1	0.218	0.395	1	0.218	0.394
P3	0.34	0	–	–	–	–	–
P3	0.35	1	0.235	0.430	1	0.237	0.430
P3	0.36	1	0.250	0.432	1	0.249	0.431
P3	0.38	1	0.275	0.435	1	0.276	0.434
P3	0.40	1	0.290	0.434	1	0.291	0.434

*The output Y_{min} is 0 for all the cases considered

The sophistication also increases the cost considerably; in many situations it may be preferable not to go for very costly breakers, but to introduce the other more economic protective measures. FCT affects the valve stroke characteristics drastically, as will be seen later. The proposed ANN controller is configured in two parts, ANN-1 and ANN-2, as shown in Fig. 3. An additional fast valving enable signal (FV) and a time input appear for ANN-2, as the training set consists of three sets of data for each fault case, respectively at 0.65 sec., 0.75 sec. and 0.85 sec. The reason being that sampling of data at more than one instance improves the training and so also the performance of ANN-2 in predicting the desired final valve opening position $Y_{\max}$. The outputs for ANN-1 are fast valving initiation signal FV, the minimum valve position $Y_{\min}$ and the valve stroke parameter T3 (time for which the valve remains closed). In mathematical terms, the controller functions can be symbolically written as follows:

$$\begin{bmatrix} FV \\ Y_{\min} \\ T_3 \end{bmatrix} = f1(\mathrm{FCT}, \Delta P, \Delta\omega)\,, \tag{8}$$

$$Y_{\max} = f2(t, \mathrm{FCT}, \Delta P, \Delta\omega)\,, \tag{9}$$

$$FV \geq 0.5\,,\ t \cong 0.65, 0.75, 0.85\,.$$

It is to be noted here that the signal FV indicates whether or not the fast valving control is required (as decided by ANN-1 inputs (8)). In other words:

$FV > 0.5\,;$ fast valving on,

$FV < 0.5\,;$ fast valving application not necessary.

The actual valve control operation begins at the turbine section when the signal FV is greater than 0.5. This is to avoid the fast valving operation, when not necessary as in case of minor system faults or when the fault is cleared within the desired time limit. FV signal is also supplied as control input to ANN-2, which begins its action only when this signal is on (or $FV > 0.5$). ANN-2 gives the final valve position on receiving the inputs for any of the three sampling times, for a particular fault case.

Various ANN structures have been tested with different training algorithms with the help of MATLAB inbuilt routines. The ANN has advantage over other training techniques that the training can be done off-line and it is well proven technique with speedy response in online application. Due to offline training capability, the time required for training does not have bearing on the performance of the controller.

In the present architecture ANN-1 has one input layer, three hidden layers and one output layer; whereas ANN-2 has one input layer, two hidden layers and an output layer, as shown in Fig. 4. The number of layers and number of neurons in these layers depends upon the accuracy desired and also upon the type of inputs and training data set available. Table 1 gives some of the details of the proposed ANN architecture; the notations used are same as in MATLAB [12]. For this type of moderate size structure the 'TRAINLM' algorithm [12], gives the fastest convergence. The performance function used is Mean Square Error (MSE). The structure proves to have fairly good accuracy and feasibility for the system under consideration (as will be clear from the observations discussed later).

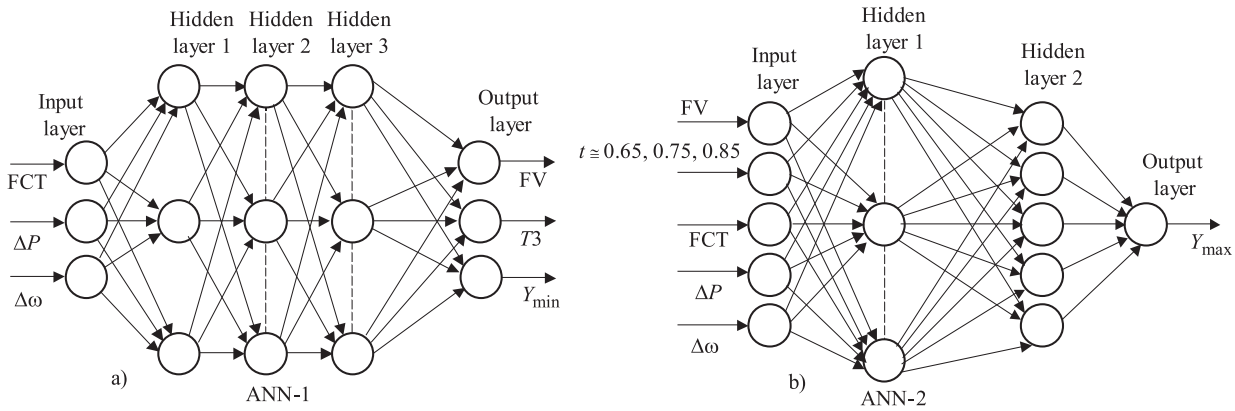

Fig. 4. Architecture of the proposed ANN controller

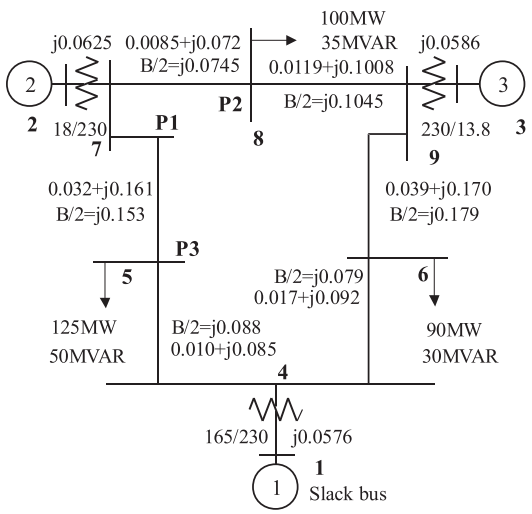

Fig. 5. WSCC 3-machine, 9-bus system; all impedances are in pu on a 100 MVA base

4 ILLUSTRATIVE SYSTEM EXAMPLE

We have considered the popular Western System Coordinated Council (WSCC) 3-machine, 9-bus system [13] shown in Fig. 5. This is also the system appearing in Refs. [14] and [15] and widely used in the literature. The base MVA is 100, and system frequency is 60 Hz. The associated excitation system, governor and turbine parameters and notations are taken as in Ref. [1]. Only severe faults are considered in present study. The study is conducted for one particular generator in a multi-machine system. The same approach can be easily extended to the other fault cases in order to obtain the desired fast valving. The generator under study is gen. #2 and therefore the three-phase faults have been simulated at various buses in its vicinity. Typically the fault locations considered are at the points P1, P2 and P3, as shown in Fig. 5. The fault is cleared by opening of the faulted line. The system, while small, is large enough to be nontrivial and thus permits the illustration of a number of stability concepts and results.

5 RESULTS AND DISCUSSIONS

The complete 3-generator 9-bus system has been simulated as a single integral model in Simulink. Fig. 6 shows the section of the complete block diagram pertaining to generator #2. The simulation of the other generators in the system will be exactly in the similar fashion, with their corresponding parameter values. Subsystem1 in Fig. 6 is meant to calculate the value of node current at the point of generator terminal. The other components of the model such as the governor, turbine and excitation system are modelled with the parameters given in references [1] and [15]; the internal details are not given here due to space constraints. The reader can refer to references [1] and [19] for the same.

The proposed ANN controller is applied to govern the fast valving action at generator #2. Table 2 presents the comparative study of the outputs predicted by the ANN based controller and the desired outputs, for different fault locations. As stated earlier, the training data set is obtained with the help of control rule discussed in Section 2 of this paper. The load level is kept fixed for the present study. There are many variations of the back-propagation algorithm and here mainly two algorithms viz. TRAINGDM, TRAINLM [12] have been used. The MATLAB generated graphs on the training performance of ANN-1 and ANN-2 have been shown in Figs. 7 and 8 respectively. Performance goal of an ANN structure is an indication of mean square error for the training data set. The performance goal for the ANN based controller is of the order of 10^{-6} in our study. It takes typically less than 200 epochs for the training algorithm to meet this goal with the proposed architecture and considered data set, as evident from the Figs. 7 and 8. After training, the ANN predicts the parameters with fairly good accuracy.

The FLC is chosen with a stroke characteristic as given in [16]. Performance of the two control strategies namely the fixed logic control (FLC) and algorithm based on rate of change of kinetic energy (RACKE) of the rotor mass as discussed in sec. 2, are compared with that of the proposed ANN controller. Fig. 9 shows the rotor angle swing

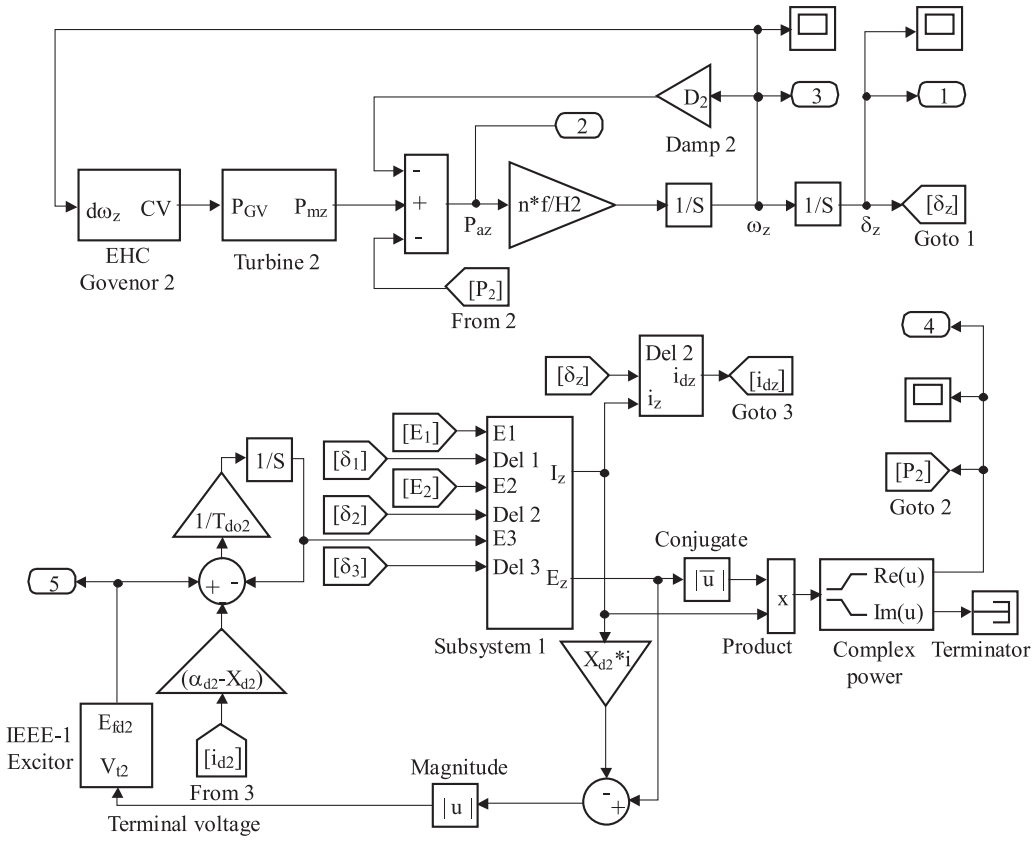

Fig. 6. The Simulink model for generator #2 in the 3-generator 9-bus system example

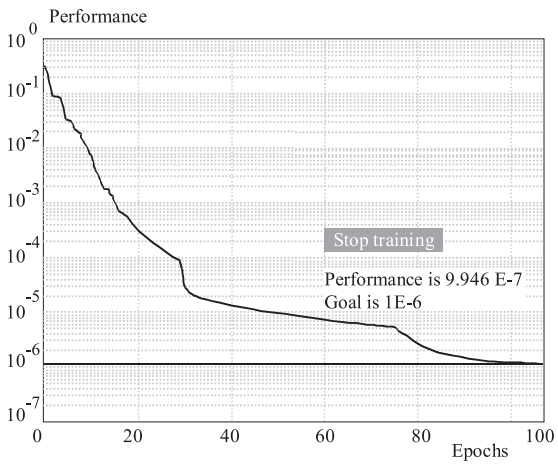

Fig. 7. Training of ANN-1 with TRAINLM

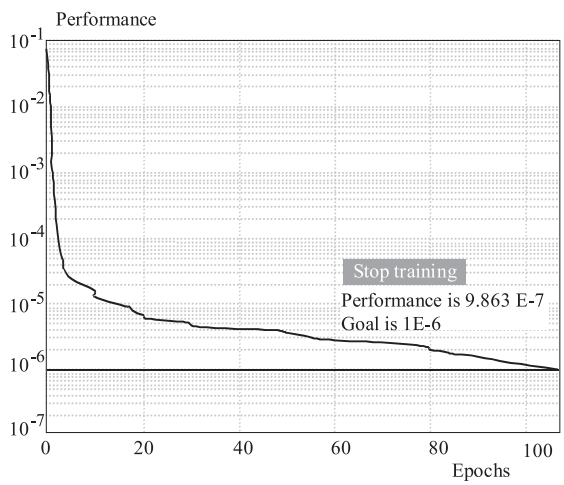

Fig. 8. Training of ANN-2 with TRAINLM

for gen. #2 for a three phase fault at location P1 of the example system; the fault is cleared by opening of line 5–7. The system can maintain stability without a fast valving stroke up to FCT less than 0.15 sec., as clear from Table 2. Fig. 9 shows that the first two strategies cannot discriminate the smaller disturbance for a lower value of FCT = 0.1 sec.; while the ANN controller can predict this resulting in the ANN-1 output FV as 0 in this case, due to its prior training based on the input variable patterns. A similar observation can be found from the result of Fig. 10, where the fault is cleared at 0.12 sec. These two results also demonstrate that in such a case where the fast valving is not desirable the unwanted valve strokes cause higher swings in the rotor angle except in the first swing. This seeming increase of first swing stability is also poorly reflected in terms of higher variation at generator terminal voltage, as depicted by Fig. 11. Fig. 12 shows the rotor angle swing for gen. #2 with FLC and ANN controllers,

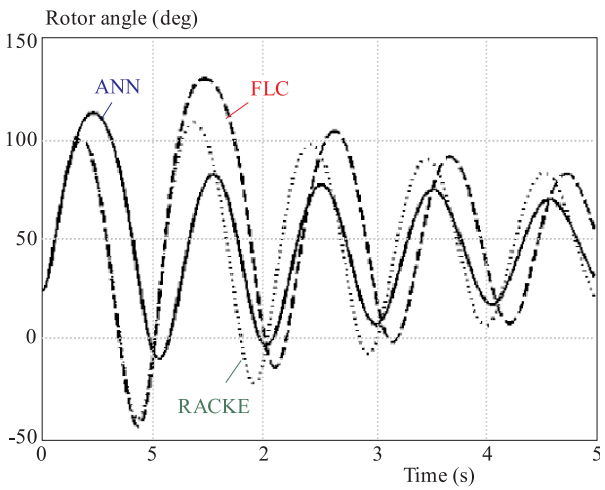

Fig. 9. Rotor angle swing (gen. #2) with FLC and ANN controllers for fault at P1 and FCT = 0.1 sec.

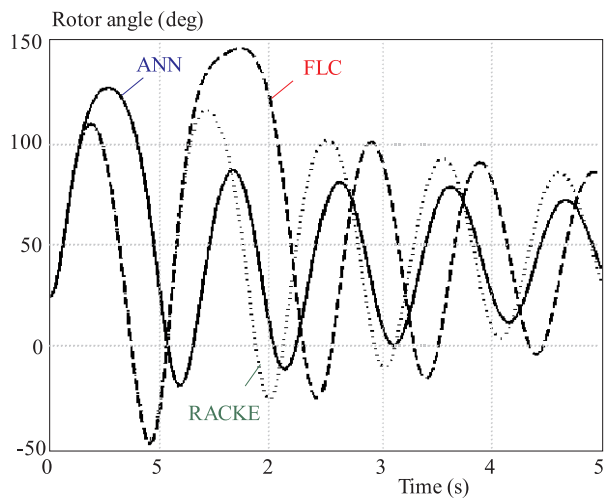

Fig. 10. Rotor angle swing (gen. #2) with FLC and ANN controllers for fault at P1 and FCT = 0.12 sec.

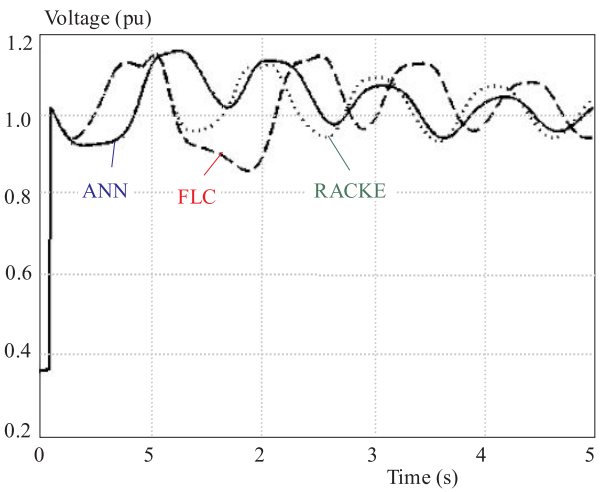

Fig. 11. Generator terminal voltage (gen. #2) with FLC and ANN controllers for fault at P1 and FCT = 0.12 sec.

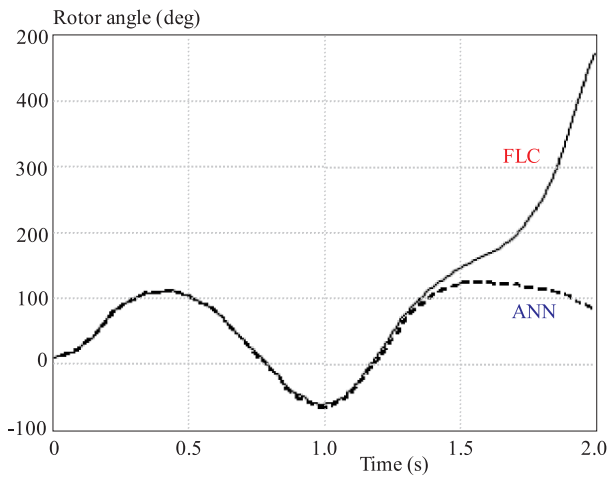

Fig. 12. Rotor angle swing (gen. #2) with FLC and ANN controllers for fault at P1 and FCT = 0.18 sec.

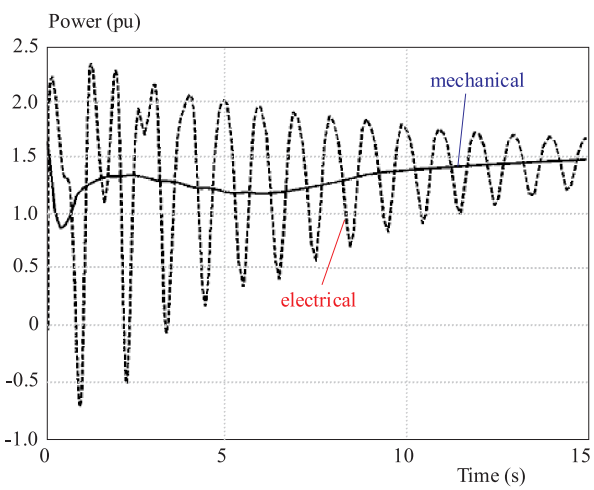

Fig. 13. Variation in mechanical power input and electrical power output of gen. #2 for fault at P1 and FCT = 0.18 sec.

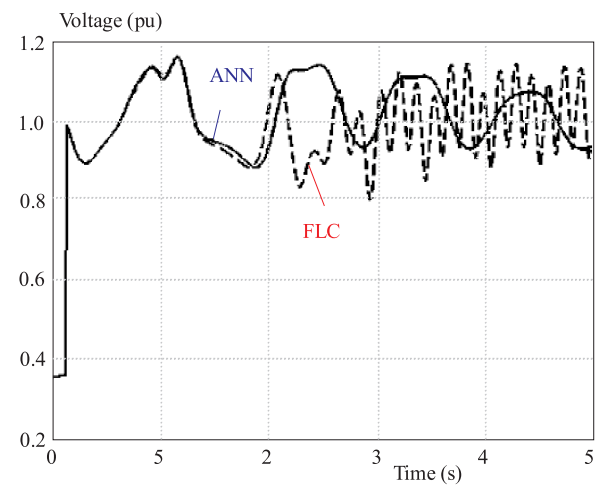

Fig. 14. Generator terminal voltage (gen. #2) with FLC and ANN controllers for fault at P1 and FCT = 0.18 sec.

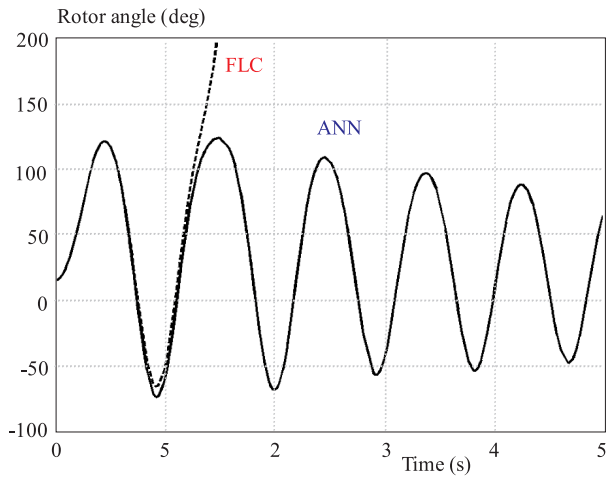

Fig. 15. Rotor angle swing (gen. #2) with FLC and ANN controllers for fault at P2 and FCT = 0.32 sec.

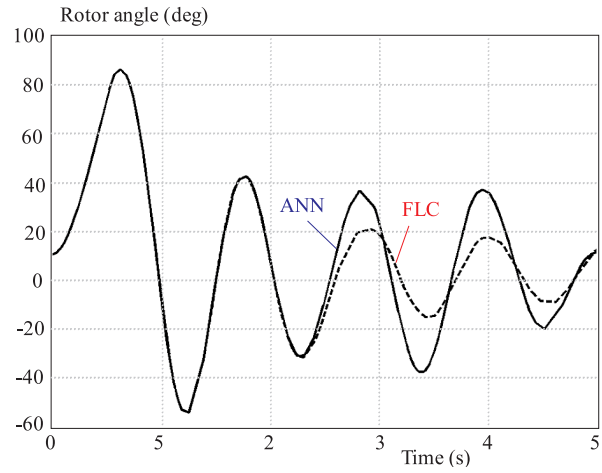

Fig. 16. Rotor angle swing (gen. #3) with FLC and ANN controllers for fault at P2 and FCT = 0.32 sec.

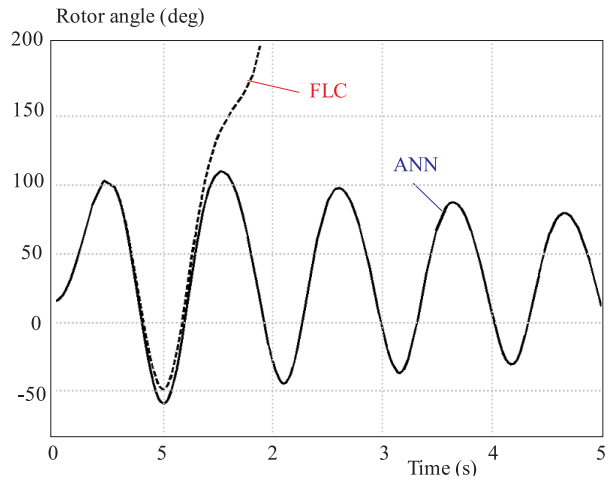

Fig. 17. Rotor angle swing (gen.#2) with FLC and ANN controllers for fault at P3 and FCT = 0.35 sec.

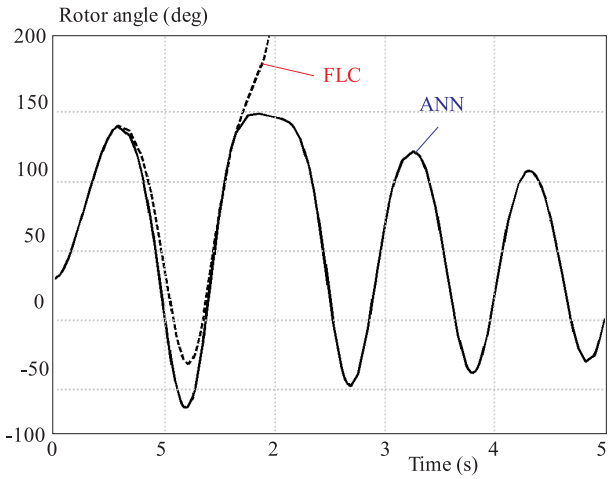

Fig. 18. Rotor angle swing (gen. #2) with FLC and ANN controllers for fault at P3 and FCT = 0.50 sec.

for a three-phase fault at P1 and FCT = 0.18 sec. It was observed that the system stability improves considerably with the application of fast valving. With the application of FLC, the generator loses synchronism at the second swing, but the ANN controller successfully maintains the system within stability limit. Fig. 13 shows the electrical and mechanical power variation for the generator, for the same fault case, while Fig. 14 gives the variation in generator terminal voltage. A wide fluctuation in the terminal voltage is observed for an unstable case, which could be avoided with the ANN controller.

Figs. 15 and 16 show the comparative rotor angle swings for gen. #2 and 3 respectively, with FLC and ANN controllers for a fault at location P2 with FCT = 0.32 sec. It can be observed that though the ANN controller may increase second or subsequent swings of some of the generators in the system, nevertheless it does work very effectively in maintaining the overall system stability. Simulation results are shown in Figs. 17 and 18 for the faults at P3 and FCT of 0.35 sec. and 0.50 sec. respectively. For the last case, the ANN controller maintains the system stability for FCT as high as 0.5 sec., which was otherwise unstable for FCT = 0.35 sec. with FLC. These two fault cases at points P2 and P3 are seen by generator #2 as partial load rejection as either of the loads at bus #8 or at bus #5 is lost, but the generator continues to feed the other load. Figs. 15 to 18 show that the ANN controller also adds to the partial load rejection capability of the system. Full load rejection for short time interval can be viewed as short circuit, as the power flow through the corresponding line section ceases almost to zero, as in case of a fault at the generator terminal. The simulation results for this would be similar as discussed for a 3-phase short circuit at point P1.

6 CONCLUSIONS

In this work an ANN based fast valving controller has been designed and tested over a multi-machine power system example. The controller is trained with the preliminary data obtained from a control logic based on rotor kinetic energy and angular speed deviation. The controller meets the target outputs with fairly good accuracy. The effect of fast valving on a particular generator in the system has been studied in detail for all the severe faults in its vicinity. The observations show a significant gain in transient stability of the system. The system can sustain a larger value of fault clearing time (in the order of 0.03 to 0.15 sec.) without losing synchronism as compared to the uncontrolled system for the same fault. The performance of ANN based controller has also been compared with the conventional fixed logic controller and also with an alternative control strategy based on speed deviation and rate of change of kinetic energy of the generator rotor. The simulation results show that an ANN-based controller has good generalization capability and therefore it can cater to the system requirements quite effectively for different fault conditions.

References

[1] KUNDUR, P.: Power System Stability and Control, EPRI Power System Engineering Series, Mc Graw-Hill, New York, 1994.

[2] PATEL, R.—BHATTI, T. S.—KOTHARI, D. P.: Improvement of Power System Transient Stability Using Fast Valving: a Review, Electric Power Components and Sys (October 2001), 927–938.

[3] EDWARDS, L.—GREGORY, J. D.—OSBORN, D. L.—DOUDNA, J. H.—PASTERNACK, B. M.—THOMPSON, W. G: Report of a Panel Discussion Sponsored Jointly by the IEEE DISCOS Working Group and ASME/IEEE Power Plant/Electrical System Interacting Working Group, Turbine Fast Valving to Aid Dystem Stability; Benefits and other Considerations, IEEE Transactions on Power Systems **PWRS-1** No. 1 (February 1986), 143–153.

[4] NAGRATH, I. J.—KOTHARI, D. P.: Power System Engineering, Tata McGraw-Hill, New Delhi, 1994.

[5] PADIYAR, K. R: Power System Dynamics Stability and Control, Interline Publishing Pvt. Ltd., 1999.

[6] CUSHING, E. W.—DRECHSLER, G. E.—KILLGOAR, W. P.—MARSHALL, H. G.—STEWART, H. R.: Fast Valving as an Aid to Power System Transient Stability an aid to power system transient stability and prompt resynchronization and rapid reload after full load rejection, IEEE Transactions on Power Apparatus and Systems, PAS-91, (July-August 1972), 1624–1636.

[7] VANDEGRIFT, J.—WOODALL, J. R.—BECKHAM, J. T.: Fast Intercept Valving Aids Unit Stability, Electrical World, July 13, 1970.

[8] HAN, Y.—WANG, Z.—CHEN, Q.—TAN, S.: Artificial Neural-Network-Based Fast Valving Control in a Power-Generation System, Engineering Application of Artificial Intelligence **10** No. 2 (1997), 139–155.

[9] CHEN, Q.—TAN, S.—HAN, Y.—WANG, Z.: Adaptive Fuzzy Scheme for Efficient Fast Valving Control,, Control Eng. Practice **5** No. 6 (1997), 811–821.

[10] AL-AZZAWI, F. J.—OMAR, F.: Direct Approach to the Switching of Shunt Elements used for Multimachine Power System Transient Stability Augmentation, Vol. 6, Proc. 5th Sci. Conference /SRC, Iraq Baghdad, Oct. 1989, 77–89.

[11] Al-AZZWI, F. J.—Al-WAFI, N. M.—JASSIM, A. K.—OMAR, F.: Braking Resistor Size, Switching Instants and Assessment of Power System Transient Stability by Direct Methods, Journal of Institution of Engineers (India) **76** (November1995), 175–180.

[12] MATLAB User's Guide, The Mathworks, Natic, MA. 2002.

[13] EPRI Report EL-484, Power system dynamic analysis phase-I (Electric Power Research Institute, July 1977).

[14] ANDERSON, P. M.—FOUAD, A. A.: Power System Control and Stability, Iowa State University Press, Ames, IA, 1977.

[15] SAUER, P. W.—PAI, M. A.: Power System Dynamics and Stability, Prentice Hall, Upper Saddle River, New Jersey, 1998.

[16] HASSAN, F. F.—BALASUBRAMANIAN, R.—BHATTI, T. S.: Fast Valving Scheme Using Parallel Valves for Transient Stability Improvement, IEE Proc.-Generation Transmission and Distribution **146** No. 3 (May 1999), 330–336.

[17] PATEL, R.—BHATTI, T. S.—KOTHARI, D. P.: A Novel Scheme of Fast Valving Control, IEEE Power Engineering Review (October 2002), 44–46.

[18] PATEL, R.: Improvement of power system transient stability by coordinated operation of fast valving and braking resistor (PhD Thesis, Indian Institute of Technology, New Delhi, India, 2002).

[19] PATEL, R.—PAGALTHIVARTHI, K. V.: MATLAB-Based Modelling of Power System Components in Transient Stability Analysis, International Journal of Modelling and Simulation **25** No. 1 (February 2005), 43–50.

Received 4 April 2005

Ramnarayan Patel works in the Electrical Engineering Department of the Indian Institute of Technology Roorkee, India. He received his PhD degree from the Indian Institute of Technology, Delhi in 2003. He has published more than 20 papers in reputed international journals/conferences. His main research interest is in the area of power system transient stability, power system dynamics and optimization, application of intelligent controls and modelling and simulation.

Krishnan V. Pagalthivarthi is Professor in the Department of Applied Mechanics, Indian Institute of Technology Delhi, India. Dr Krishnan received his B Tech from IIT Delhi in 1979 and obtained MSME in 1984 and PhD in 1988 from Georgia Institute of Technology. He has guided many students for their M.Tech., MS(R) and PhD dissertations and published more than 35 research papers in various journals of repute. Dr Krishnan is recognized as a leading industry CFD software developer for two-phase flow and erosion prediction in slurry pumps. He has made several short visits to GIW Hydraulic Lab (in the US) to serve as a CFD group leader.