Journal of ELECTRICAL ENGINEERING, VOL. 64, NO. 3, 2013, 133–142

COMPARISON OF HONEY BEE MATING OPTIMIZATION AND GENETIC ALGORITHM FOR COORDINATED DESIGN OF PSS AND STATCOM BASED ON DAMPING OF POWER SYSTEM OSCILLATION

Amin Safari * — **Ali Ahmadian** ** — **Masoud Aliakbar Golkar** **

Recently, honey bee mating optimization (HBMO) technique and genetic algorithms (GA) have attracted considerable attention among various modern heuristic optimization techniques. This paper presents the application and performance comparison of HBMO and GA optimization techniques, for coordinated design of STATCOM and PSS. The design objective is to enhance damping of the low frequency oscillations. The design problem of the controller is formulated as an optimization problem and both HBMO and GA optimization techniques are employed to search for optimal controller parameters. The performance of both optimization techniques for damping low frequency oscillations are tested and demonstrated through nonlinear time-domain simulation and some performance indices studies to different disturbances over a wide range of loading conditions. The results show that the designed controller by HBMO performs better than GA in finding the solution. Moreover, the system performance analysis under different operating conditions show that the φ based controller is superior to the C based controller.

K e y w o r d s: STATCOM, honey bee mating optimization, genetic algorithm, damping controller, low frequency oscillations

1 INTRODUCTION

Recently, heuristic methods are widely used to solve global optimization problems. Techniques such as genetic algorithms, tabu search algorithm, simulated annealing, evolutionary programming, particle swarm optimization techniques and honey bee mating optimization have been used earlier to solving optimization problems that were previously difficult or impossible to solve [1, 2]. These techniques are finding popularity within research community as design tools and problem solvers because of their versatility and ability to optimize in complex multimodal search spaces applied to non differentiable cost functions [3].

Genetic Algorithms are one of the stochastic search algorithms based on the mechanics of natural genetics. GA solves optimization problems by exploitation of a random search. When searching a large state-space, or n dimensional surface, the GA may offer significant benefits over the classical optimization techniques such as linear programming or nonlinear constrained optimization. Individuals in GAs are in the form of character strings that are analogous to the chromosome found in DNA. Each individual represents a possible solution within a search space [4]. Though GA methods have been employed successfully to solve complex optimization problems, recent research has identified deficiencies in its performance. This degradation in efficiency is apparent in applications with highly epistatic objective functions, thereby, hampering crossover and mutation operations and compromising the improved fitness of offspring because population chromosomes contain similar structures. Moreover, the premature convergence of GA degrades its performance by reducing its search capability, leading to a higher probability of being trapped to a local optimum [5, 6]. The honey bee is one of the social insects that can just survive as a member of colony. The activity of honey bee suggests many characteristics like together working and communication. The honey-bee mating process has been considered as a typical swarm-based approach to optimization, in which the search algorithm is inspired by the process of real honey-bee mating [7].

Stability of power system is one of the most important aspects in electric system operation. By the development of interconnection of large electric power systems, low frequency oscillations have become a serious problem in power system. This oscillation occurs as result of a sudden increase in the load, loss of one generator or switching out of a transmission line during a fault [8]. Once started, they would continue a long period of time. In some cases, they continue to grow, causing system separation if no adequate damping is available [9]. Thus, Damping of low-frequency electro-mechanical oscillation is very important for the system secure operation.To enhance system damping and increase dynamic stability, the installation of supplementary excitation control, power system stabilizer (PSS), is a sample, effective and economical

* Department of Electrical Engineering, Ahar Branch, Islamic Azad University, Ahar, Iran, asafari1650@yahoo.com, ** Electrical Engineering Department of K.N. Toosi University of Technology, Tehran, Iran

DOI: 10.2478/jee-2013-0020, ISSN 1335-3632

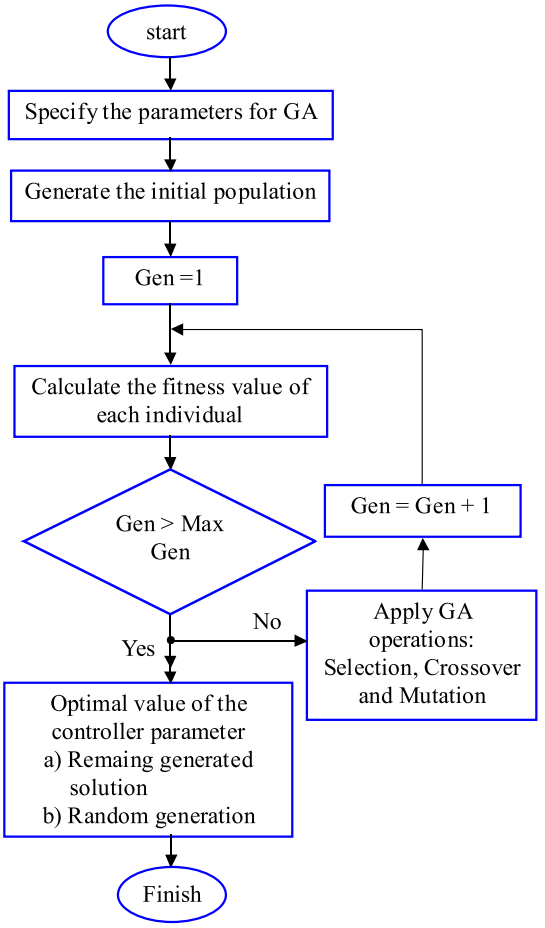

Fig. 1. Flowchart of the Genetic Algorithm

method to solution this problem [10]. However, PSSs suffer a drawback of being liable to cause great variations in the voltage profile and they may even result in leading power factor operation and losing system stability under severe disturbances, especially those three-phase faults which may occur at the generator terminals [11]. In recent years, flexible AC transmission system (FACTS) devices are one of the most effective ways to improve power system operation controllability and power transfer limits. Through the modulation of bus voltage, phase shift between buses, and transmission line reactance, FACTS devices can cause a substantial increase in power transfer limits during steady-state. These devices are addition to normally steady-state control of a power system but, due to their fast response, FACTS can also be used for power system stability enhancement through improved damping of power swings [12]. The real power flow with primary function of FACTS devices can be regulated to reduce the low frequency oscillation and enhance power system stability. Static synchronous compensator (STATCOM) is a member of FACTS family that is connected in shunt with the system. From the power system dynamic stability viewpoint, the STATCOM provides better damping characteristics than the SVC as it is able to transiently exchange reactive power with the system, so it can improve oscillation stability better than SVC [13, 14], because of it's greater reactive current output capability at depressed voltage, faster response, better control stability, lower harmonics and smaller size, etc [15]. The STATCOM is based on the principle that a voltage- source inverter generates a controllable AC voltage source behind a transformer-leakage reactance so that the voltage difference across the reactance produces active and reactive power exchange between the STATCOM and the transmission network. Several trials have been reported in the literature to dynamic models of STATCOM in order to design suitable controllers for power flow, voltage and damping controls [16]. Wang [17] established the linearized Phillips-Heffron model of a power system installed with a STATCOM and demonstrated the application of the model in analyzing the damping effect of the STATCOM. Further, no effort seems to have been made to identify the most suitable STATCOM control parameter, in order to arrive at a robust damping controller. Intelligent controllers have the potential to overcome the above mentioned problems. Fuzzy-logic-based controllers, for example, have been used for controlling the STATCOM [18]. The performance of such controllers can further be improved by adaptively updating their parameters. Also, although using the robust control methods [19], the uncertainties are directly introduced to the synthesis, but due to the large model order of power systems the order resulting controller will be very large in general, which is not feasible because of the computational economical difficulties in implementing. It has been observed that utilizing a feedback supplementary control, in addition to the FACTS device primary control, can considerably improve system damping and can also improve system voltage profile, which is advantageous over PSSs [16, 20]. However, uncoordinated control of FACTS devices and PSS may cause destabilizing interactions. To improve overall system performance, many researches were made on the coordination between PSSs and FACTS damping controllers [21–23]. Some of these methods are based on the complex nonlinear simulation, while the others are based on the linearized power system model.

In this paper, the optimal tuning of the coordinated design of PSS and STATCOM based damping controller is considered as an optimization problem and both HBMO and GA techniques are used for searching optimized parameters. The effectiveness and robustness of the proposed controller is demonstrated through nonlinear time-domain simulation and and some performance indices studies to damp low frequency oscillations under different operating conditions. Results evaluation show that the HBMO based tuned damping controller achieves good performance for a wide range of operating conditions and is superior to designed controller using GA technique. Moreover, the system performance analysis show that the φ based controller is superior to the C based controller.

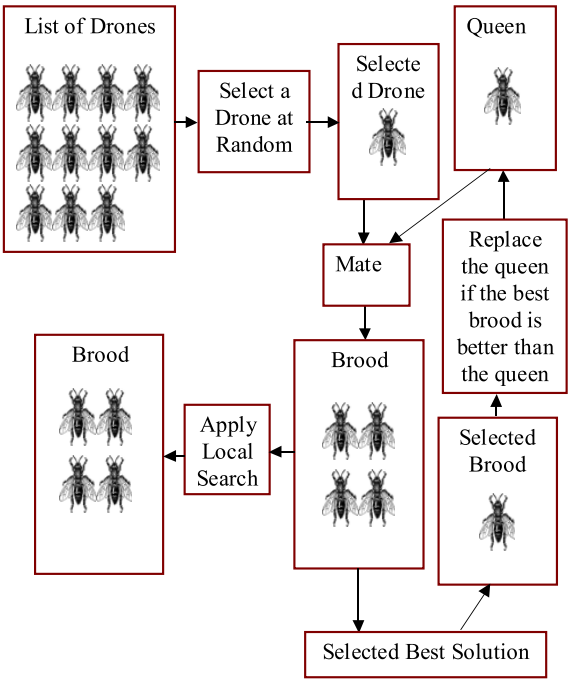

Fig. 2. The HBMO algorithm

2 DESCRIPTION OF GA AND HBMO OPTIMIZATION TECHNIQUE

2.1 Genetic algorithm

Algorithms are stochastic search techniques based on the mechanism of natural selection and survival of the fittest [24]. Further, they combine function evaluation with randomized and/or well-structured exchange of information among solutions to arrive at global optimum. The architecture of GA implementation can be segregated into three constituent phases namely: initial population generation, fitness evaluation and genetic operations. The GA control parameters, such as population size, crossover probability and mutation probability are selected, and an initial population of binary strings of finite length is randomly generated. Given a random initial population GA operates in cycles called generations, as follows [25]:

- Each member of the population is evaluated using a fitness function.
- The population undergoes reproduction in a number of iterations. One or more parents are chosen stochastically, but strings with higher fitness values have higher probability of contributing an offspring.
- Genetic operators, such as crossover and mutation are applied to parents to produce offspring.
- The offspring are inserted into the population and the process is repeated.

The crossover is the kernel of genetic operations. It promotes the exploration of new regions in the search space using randomized mechanism of exchanging information between strings. Two individuals placed in the mating pool during reproduction are randomly selected. A crossover point is then randomly selected and information from one parent up to the crossover point is exchanged with the other parent. Performance method is illustrated below for the used simple crossover technique.

Another process also considered in this work is the mutation process of randomly changing encoded bit information for a newly created population individual. Mutation is generally considered as a secondary operator to extend the search space and cause escape from a local optimum when used prudently with the selection and crossover schemes. Using each set of controller parameters the time domain simulation is performed and the fitness function value is determined. The computational flow chart of GA algorithm is shown in Fig. 1. While applying GA, a number of parameters are required to be specified. Optimization is terminated by the pre-specified number of generations for genetic algorithm.

2.2 Honey Bee Mating Optimization

The honey bee is one of the social insects that can only survive as a member of colony. The activity of honey bee suggests many characteristics like together working and communication. A honey bee colony normally includes a single egg-laying queen life-span of which is more than that of other bees. Depending upon the season the colony may have 60,000 workers or more. A colony may contain a queen during its life-cycle. That is named mono-gynous one. Only the queen is fed by royal jelly. Nurse bees take care of this gland and feed it to queen. The royal jelly causes the queen bee biggest bee in the hive. Several hundred drones live with queen and its workers. Queen bee life- span is about 5 or 6 years, whereas rest of the bees, especially worker bees, oven their period of living do not reach to 1 year. The drones die after mating process.

The drones act in father function in the colony that are haploid and amplify or multiply their mother's genome without changing their genetics combinations, but mutation. So, drones are agents that anticipate one of the mother's gametes and by the sake of that female can do genetically like males. Broods, that be cared by workers, improve from fertilized or unfertilized eggs. They represent potential queens and prospective drones, respectively. In marriage process, the queens in mating period, their mate flight of the nest to the far places [26].

Insemination ends with the gradual death of drones, and by the sake of that queens receive the mating sign. Any drone can take part in mating process just one time, but the queens mate several times. These features make bee mating very interesting among insects.

2.2.1 Operation principle of HBMO

The queen plays the most important function in mating process in nature and also HBMO algorithm. The spermateca is a place for sperm of drones and queen's, all drones, however are originally haploid; after that a mating done successfully, the drone's sperm is stored in the queen's spermatheca. A brood is reproduced by coming

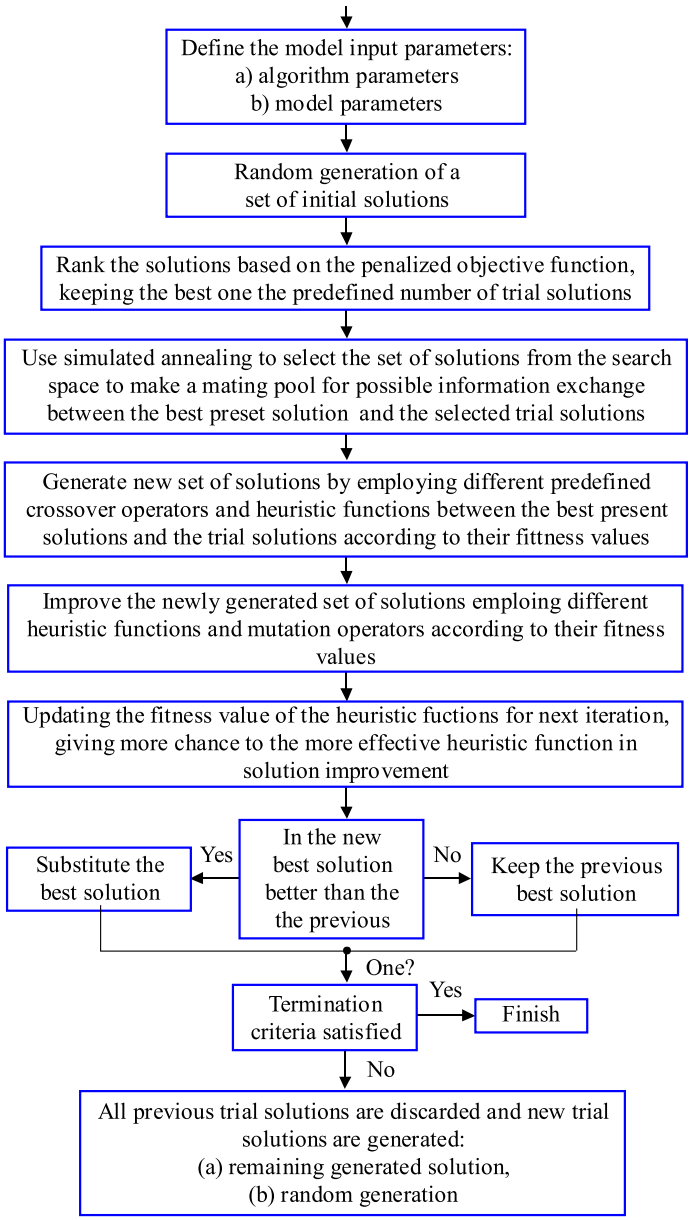

Fig. 3. Flowchart of the HBMO algorithm

of some genes of drone's into the brood genotype. Noting that brood has only one genotype. Therefore, an HBMO algorithm would be constructed by the following five important stages [7]:

1. The algorithm starts with mating flight, where a queen selects drones probabilistically from the spermatheca. A drone is selected from list randomly for the creation of broods.
2. Creating of new broods by combining of drone's genotypes with the queens.
3. Using of workers to lead local searching on broods.
4. Adaptation of worker's ability, based on the improvement of broods.
5. Substitution of worker queens by stronger and aptitude broods.

However, when all queens completed their mating flight, start breeding. All of broods after generation, are sorted according to fitness, *ie* the best brood is replaced by the worst queens until all of queens be better and there is no only needing to broods. After completing of mating, remaining broods finally killed in order to new mating process begin. The main steps in the HBMO algorithm are presented in Fig. 2.

2.2.2 Original HBMO algorithm

A drone mates with a queen probabilistically using an annealing function like

$$\mathrm{Prob}(D, Q) = \exp(-\Delta f / S(t)) \tag{1}$$

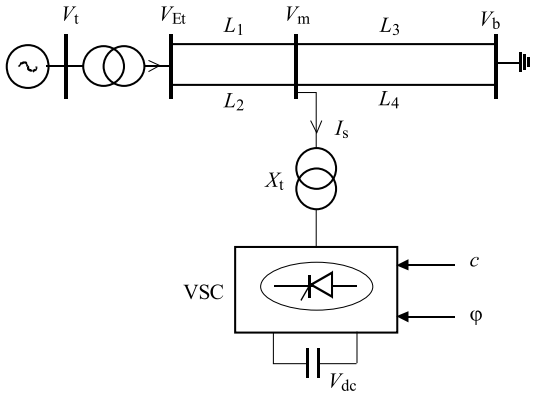

Fig. 4. SMIB power system equipped with STATCOM

where Prob(D, Q) is probability of adding drone's sperm D to queen's spermatheca Q, $\Delta(f)$ is perfect difference of fitness D and queen, and $s(t)$ is speed of the queen at time t. The mating is high either when queen's speed level is high, or when drone's fitness is equal with queen's. After every transition, speed of queen will decrease according to the following equations

$$S(t+1) = \alpha \times s(t)\,, \tag{2}$$

$$E(t+1) = E(t) - \gamma \tag{3}$$

where, α is a factor from $(0, 1)$ and γ is the amount of energy, $E(t)$ reduction after each transition. The algorithm starts with three user-defined parameters and one predefined parameter. The predefined parameter is the number of workers (W), representing the number of heuristics encoded in the program. The three user-defined parameters are the number of queens, the queen's spermatheca size representing the maximum number of mating per queen in a single mating flight, and the number of broods that will be bear by all queens. The energy and speed of each queen at the start of each mating flight is initialized at random. A number of mating flights are realized. At commence of a mating flight, drones are generated randomly and the queen selects a drone using the probabilistic rule in (1). If mating is done successfully, storing of drone's sperm in queen's spermatheca occur. Using of combination of drone's and queen's genotaypes, generate a new brood, which can be improved later by employing workers to conduct local search. Main difference (or one of them) HBMO algorithm from classic evolutionary algorithms that is storing of many different drone's sperm in spermatheca by queen cause which the queen use of them to create new solution for fittest of broods, which gives the possibility to have fittest broods more. The rule of workers is brood caring and for the sake of that they are not separated of population and used to grow the broods that produced by queen. Every worker has different capability for producing in solutions. The computational flow chart of HBMO algorithm is shown in Fig. 3.

3 POWER SYSTEM MODELING

A single machine infinite bus power (SMIB) system installed with a STATCOM in Fig. 4, which is widely used for studies of power system oscillations, is adopted in this paper to demonstrate the proposed method. The synchronous generator is delivering power to the infinite-bus through a double circuit transmission line and a STATCOM. The system data is given in the Appendix. The system consists of a step down transformer (SDT) with a leakage reactance XSDT, a three phase GTO-based voltage source converter, and a dc capacitor [17].

The VSC generates a controllable AC voltage source $v_0(t) = V_0 \sin(wt - \varphi)$ behind the leakage reactance. The voltage difference between the STATCOM bus AC voltage, $v_L(t)$ and $v_0(t)$ produces active and reactive power exchange between the STATCOM and the power system, which can be controlled by adjusting the magnitude V_0 and the phase φ. The dynamic relation between the capacitor voltage and current in the STATCOM circuit are expressed as [17]

$$\mathcal{J}_{L0} = I_{L0d} + jI_{L0q}\,, \tag{4}$$

$$\mathcal{V}_0 = cV_{dc}(\cos\varphi + j\sin\varphi) = cV_{dc}\angle\phi\,, \tag{5}$$

$$\dot{V}_{dc} = \frac{I_{dc}}{C_{dc}} = \frac{c}{C_{dc}}(I_{L0d}\cos\varphi + I_{L0q}\sin\phi) \tag{6}$$

where for the PWM inverter $c = mk$ and k is the ratio between AC and DC voltage depending on the inverter structure, m is the modulation ratio defined by the PWM and the phase c is also defined by the PWM. The C_{dc} is the dc capacitor value and I_{dc} is the capacitor current while I_{L0d} and I_{L0q} are the d-and q-components of the STATCOM current, respectively. The dynamics of the generator and the excitation system are expressed through a third order model given as [17, 18]

$$\dot{\delta} = \omega_0(\omega - 1)\,, \tag{7}$$

$$\dot{\omega} = (P_m - P_e - D\Delta\omega)/M\,, \tag{8}$$

$$\dot{E}'_q = (-E_q + E_{fd})/T'_{do}\,, \tag{9}$$

$$\dot{E}_{fd} = \big(-E_{fd} + K_a(V_{ref} - V_t)\big)/T_a\,. \tag{10}$$

The expressions for the power output, terminal voltage, and the d-q axes currents in the transmission line and STATCOM, respectively, are

$$I_{tld} = \frac{\big(1 + \frac{X_{LB}}{X_{SDT}}\big)e'_q - \frac{X_{LB}}{X_{SDT}} mV_{dc}\sin\varphi - V_b\cos\varphi}{X_{tL} + X_{LB} + \frac{X_{tL}}{X_{LB}} + \big(1 + \frac{X_{LB}}{X_{SDT}}\big)x'_d}\,, \tag{11}$$

$$I_{tlq} = \frac{\frac{X_{LB}}{X_{SDT}} mV_{dc}\cos\varphi + V_b\sin\varphi}{X_{tL} + X_{LB} + \frac{X_{tL}}{X_{LB}} + \big(1 + \frac{X_{LB}}{X_{SDT}}\big)x_q}\,, \tag{12}$$

$$I_{Lod} = frace'_q - (x'_d + X_{tL})I_{tLq} - mV_{dc}\sin\varphi X_{SDT}\,, \tag{13}$$

$$I_{Loq} = \frac{mV_{dc}\cos\varphi - (x'_d + X_{tL})I_{tLq}}{X_{SDT}} \tag{14}$$

where $X_{tL} = X_T + \frac{1}{2}X_L$, the X_T, x'_d and x_q are the transmission line reactance, d-axis transient reactance, and q-axis reactance, respectively.

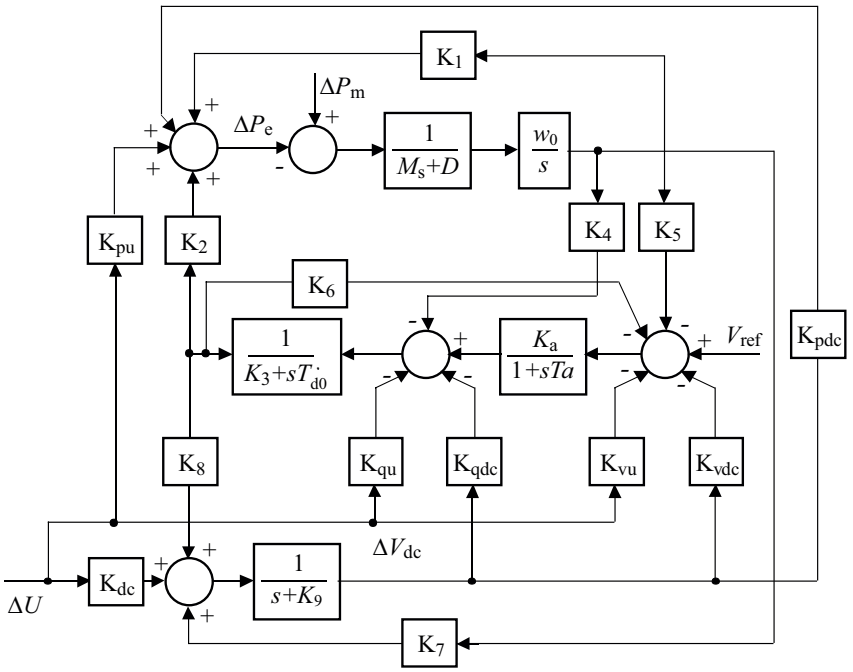

Fig. 5. Modified Heffron-Phillips model

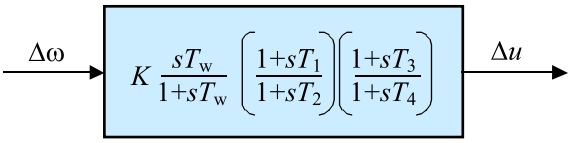

Fig. 6. Power oscillation damping controller

3.1 Power system linearized model

A linear dynamic model is obtained by linearizing the nonlinear model around an operating condition. The linearized model of power system as shown in Fig. 4 is given as follows

$$\Delta\dot{\delta} = \omega_0 \Delta\omega\,, \tag{15}$$

$$\Delta\dot{\omega} = (-\Delta P_e - D\Delta\omega)/M\,, \tag{16}$$

$$\Delta\dot{E}' = (-\Delta E_q + \Delta E_{fd})/T'_{do}\,, \tag{17}$$

$$\Delta\dot{E}'_{fd} = \big(K_A(\Delta v_{ref} - \Delta v) - \Delta E_{fd}\big)/T_A\,, \tag{18}$$

$$\Delta\dot{v}_{dc} = K_7\Delta\delta + K_8\Delta E'_q - K_9\Delta v_{dc} + K_{dc}\Delta c + K_{d\varphi}\Delta\varphi\,, \tag{19}$$

$$\Delta P_e = K_1\Delta\delta + K_2\Delta E'_q + K_{pdc}\Delta v_{dc} + K_{pc}\Delta c + K_{p\varphi}\Delta\varphi\,, \tag{20}$$

$$\Delta E'_q = K_4\Delta\delta + K_3\Delta E'_q + K_{qdc}\Delta v_{dc} + K_{qc}\Delta c + K_{q\varphi}\Delta\varphi\,, \tag{21}$$

$$\Delta V_t = K_5\Delta\delta + K_6\Delta E'_q + K_{vdc}\Delta v_{dc} + K_{vc}\Delta c + K_{v\varphi}\Delta\varphi\,, \tag{22}$$

The $K_1, K_2, \ldots, K_9, K_{pu}, K_{qu}$ and K_{vu} are linearization constants. The state-space model of power system is given by

$$\dot{x} = Ax + Bu\,, \tag{23}$$

where the state vector x, control vector u, A and B are

$$x = \begin{bmatrix} \Delta\delta & \Delta\omega & \Delta E'_q & \Delta E_{fd} & \Delta v_{dc} \end{bmatrix}\,, \tag{24}$$

$$u = \begin{bmatrix} \Delta c & \Delta\varphi \end{bmatrix}^\top\,, \tag{25}$$

$$A = \begin{bmatrix} 0 & w_0 & 0 & 0 & 0 \\ -\frac{K_1}{M} & 0 & -\frac{K_2}{M} & 0 & -\frac{K_{pdc}}{M} \\ -\frac{K_4}{T'_{do}} & 0 & -\frac{K_3}{T'_{do}} & -\frac{1}{T'_{do}} & -\frac{K_{qdc}}{T'_{do}} \\ -\frac{K_A K_5}{T_A} & 0 & -\frac{K_A K_6}{T_A} & -\frac{1}{T_A} & -\frac{K_A K_{vdc}}{T_A} \\ K_7 & 0 & K'_8 & 0 & -K_9 \end{bmatrix},$$

$$B = \begin{bmatrix} 0 & 0 \\ -\frac{K_{pc}}{M} & -\frac{K_{p\varphi}}{M} \\ -\frac{K_{qc}}{T'_{do}} & -\frac{K_{q\varphi}}{T'_{do}} \\ -\frac{K_A K_{vc}}{T_A} & -\frac{K_A K_{v\varphi}}{T_A} \\ K_{dc} & K_{d\varphi} \end{bmatrix}.$$

The block diagram of the linearized dynamic model of SMIB power system with STATCOM is shown in Fig. 5.

3.2 Problem formulation

The power oscillation damping (POD) controller is designed to produce an electrical torque in phase with the speed deviation according to phase compensation method. The speed deviation ?? is considered as the input to the damping controller. The structure of POD controller is given in Fig. 6. This controller may be considered as a lead-lag compensator. It comprises gain block, signal-washout block and lead-lag compensator.

The block diagram of STATCOM dc voltage PI controller with power oscillation damping stabilizer is shown in Fig. 7. The DC-voltage regulator controls the DC voltage across the DC capacitor of the STATCOM. Figure 8

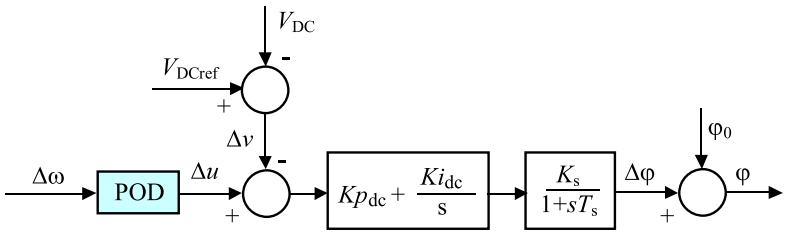

Fig. 7. STATCOM PI controller for dc voltage

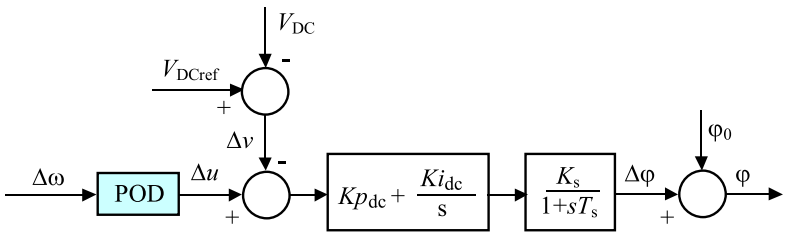

Fig. 8. STATCOM PI controller for ac voltage

illustrates the block diagram of STATCOM ac voltage PI controller with a power oscillation damping stabilizer.

$\Delta\omega$ and Δu are the stabilizer output and input signals respectively, K is the stabilizer gain, T_w is the washout time constant, and T_1, T_2, T_3, and T_4 are the stabilizer time constants. In this structure, T_w, T_2, and T_4 are usually prespecified. The controller gain K and time constants T_1 and T_3 are to be determined. In this study, the input signal of the proposed damping stabilizers is the speed deviation, $\Delta\omega$.

3.3 Objective Function

In the proposed method, we must tune the STATCOM controller parameters optimally to improve overall system dynamic stability. Since the selection of the output feedback gains for mentioned STATCOM based damping controller is a complex optimization problem. Thus, to acquire an optimal combination, this paper employs HBMO to improve optimization synthesis and find the global optimum value of objective function. In this study, an Integral of Time multiplied Absolute value of the Error (ITAE) is taken as the objective function. Fur our optimization problem, objective function is time domain-based objective function

$$J = \sum_{i=1}^{N_p} \int_0^{t_{sim}} |\Delta\omega_i| t \mathrm{d}t \tag{26}$$

where, t_{sim} is the time range of simulation and N_p is the total number of operating points for which the optimization is carried out. It is aimed to minimize this objective function in order to improve the system response in term of the settling time and overshoots. The design problem can be formulated as the following constrained optimization problem, where the constraints are the controller parameters bounds

$$\begin{aligned}
&\text{Minimize } J \text{ Subject to:} \\
&KP_{AC}^{\min} \le KP_{AC} \le KP_{AC}^{\max}, \\
&KI_{AC}^{\min} \le KI_{AC} \le KI_{AC}^{\max}, \\
&KP_{DC}^{\min} \le KP_{DC} \le KP_{DC}^{\max}, \\
&KI_{DC}^{\min} \le KI_{DC} \le KI_{DC}^{\max}, \\
&K_{PSS}^{\min} \le K_{PSS} \le K_{PSS}^{\max}, \\
&K_{C}^{\min} \le K_{C} \le K_{C}^{\max}, \\
&K_{\varphi}^{\min} \le K_{\varphi} \le K_{\varphi}^{\max}, \\
&T_{1PSS}^{\min} \le T_{1PSS} \le T_{1PSS}^{\max}, \\
&T_{3PSS}^{\min} \le T_{3PSS} \le T_{3PSS}^{\max}, \\
&T_{1C}^{\min} \le T_{1C} \le T_{1C}^{\max}, \\
&T_{3C}^{\min} \le T_{3C} \le T_{3C}^{\max}, \\
&T_{1\varphi}^{\min} \le T_{1\varphi} \le T_{1\varphi}^{\max}, \\
&T_{3\varphi}^{\min} \le T_{3\varphi} \le T_{3\varphi}^{\max},
\end{aligned} \tag{27}$$

The proposed approaches employ to solve this optimization problem and search for an optimal set of controller parameters. The optimization of controller parameters is carried out by evaluating the objective function as given in (26) with constraints (27), which considers a multiple of operating conditions. The operating conditions are given in Tab. 1.

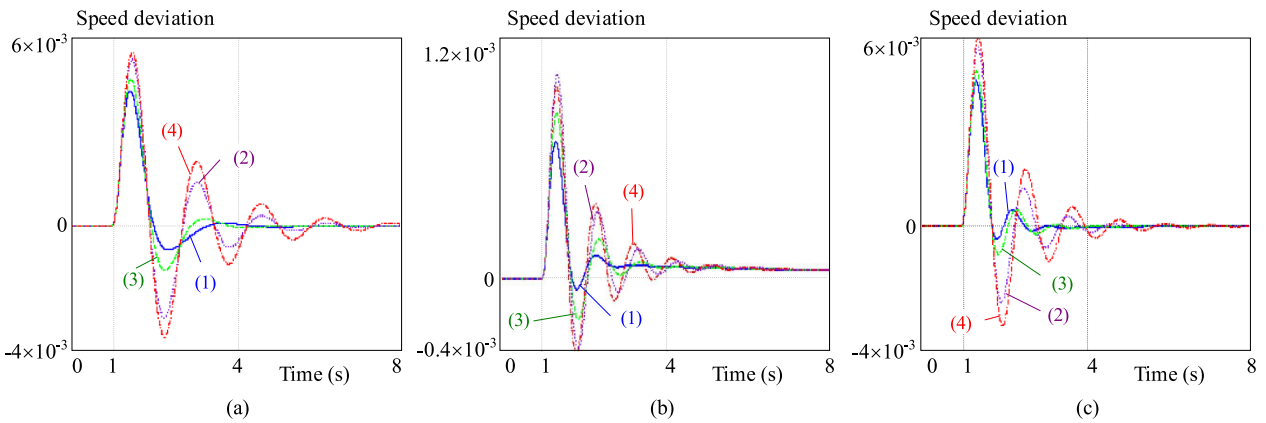

Fig. 9. Dynamic responses for $\Delta\omega$ at loading conditions (φ&PSS): (a) – nominal, (b) – light, (c) – heavy; HBMO: (1)– solid - coordinated, (2) – dotted - uncoordinated, GA: (3) – dashed - coordinated, and (4) – dot-dashed - uncoordinated

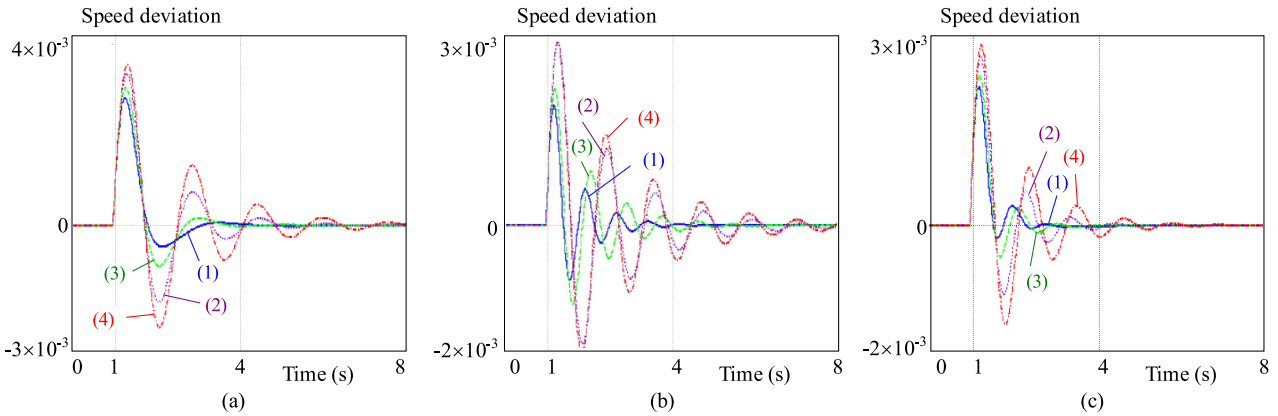

Fig. 10. Dynamic responses for $\Delta\omega$ at loading conditions (φ&PSS): (a) – nominal, (b) – light, (c) – heavy; HBMO: (1)– solid - coordinated, (2) – dotted - uncoordinated, GA: (3) – dashed - coordinated, and (4) – dot-dashed - uncoordinated

Table 1. Loading conditions

Loading condition	P_e (pu)	Q_e (pu)	X_L
nominal	0.8	0.15	0.3
light	0.2	0.01	0.3
heavy	1.2	0.4	0.3

In order to acquire better performance, size of spermatecha, number of variables, maximum number of mating flight, N_{queen}, N_{brood}, and $N_{workers}$ is chosen as 50, 5, 30, 1, 50 and 1000, respectively. The final values of the optimized parameters with objective function, J, are given in Tabs. 2 and 3.

4 SIMULATION RESULTS

The performance of the proposed controller under transient conditions is verified by applying a 6-cycle three-phase fault at $t = 1$ sec, at the middle of the L_1 transmission line. The fault is cleared by permanent tripping of the faulted line. To evaluate the performance of the proposed coordinated design approach the response with the proposed controllers are compared with the response of the PSS and STATCOM controller individual design. The speed deviation of generator at nominal, light and heavy loading conditions with coordinated and uncoordinated design of the controllers is shown in Figs. 9 and 10.

Table 2. The optimal parameter settings of the proposed controllers (C & PSS)

Parameters	Type of controller			
	HBMO Algorithm		Genetic Algorithm	
	Individual	Coordinated	Individual	Coordinated
K_{pss}	24.1626	73.241	17.1349	84.214
T_{1pss}	0.7328	0.098	0.8122	0.0512
T_{2pss}	0.1	0.1	0.1	0.1
T_{3pss}	0.3187	0.2329	0.1378	0.3114
T_{4pss}	0.1	0.1	0.1	0.1
K_C	95.692	88.232	69.55	83.932
T_{1C}	0.8154	0.8723	0.724	0.7564
T_{2C}	0.4	0.4	0.4	0.4
T_{3C}	0.5194	0.9138	0.3522	0.7865
T_{4C}	0.4	0.4	0.4	0.4
Kp_{ac}	2.365	6.5	1.48	7.3
Ki_{ac}	0.0271	0.014	0.099	0.011

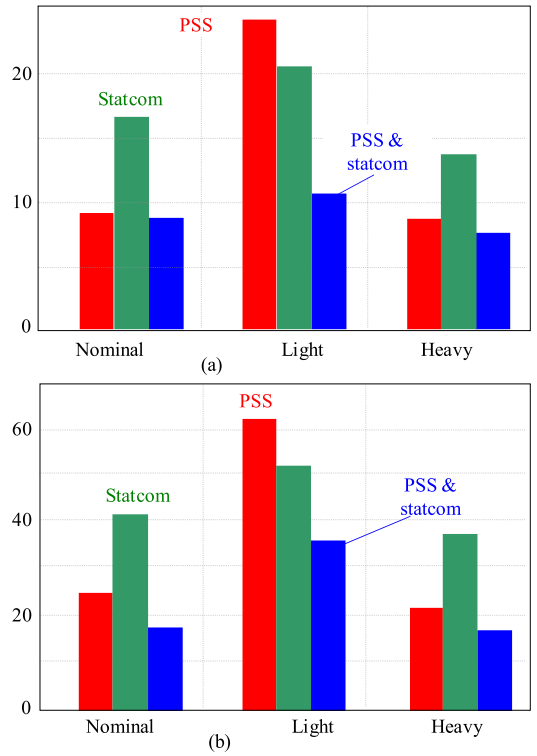

Fig. 11. Value of performance index: (a) – ITAE, and (b) – FD

Table 3. The optimal parameter settings of the proposed controllers (φ & PSS)

Parameters	Type of controller			
	HBMO Algorithm		Genetic Algorithm	
	Individual	Coordinated	Individual	Coordinated
K_{pss}	24.1626	86.543	17.1349	95.675
T_{1pss}	0.7328	1.4633	0.8122	1.3342
T_{2pss}	0.1	0.1	0.1	0.1
T_{3pss}	0.3187	0.3743	0.1378	0.3211
T_{4pss}	0.1	0.1	0.1	0.1
K_{φ}	161.44	145.65	132.23	141.23
$T_{1\varphi}$	0.16796	0.2132	0.6791	0.5465
$T_{2\varphi}$	0.4	0.4	0.4	0.4
$T_{3\varphi}$	0.9368	0.8132	0.4466	0.6289
$T_{4\varphi}$	0.4	0.4	0.4	0.4
Kp_{dc}	99.78	76.92	105.23	97.56
Ki_{dc}	0.4762	0.543	0.4851	0.6754

To demonstrate performance and robustness of the proposed method, two performance indices: the Integral of the Time multiplied Absolute value of the Error (ITAE) and Figure of Demerit (FD) based on the system performance characteristics are defined as

$$ITAE = 1000 \int_0^{t_{sim}} |\Delta\omega| t dt\,, \tag{28}$$

$$FD = (OS \times 500)^2 + (US \times 2000)^2 + T_s^2 \tag{29}$$

where speed deviation ($\Delta\omega$), Overshoot (OS), Undershoot (US) and settling time of speed deviation of the machine is considered for evaluation of the ITAE and FD indices. It is worth mentioning that the lower the value of these indices is the better the system response in terms of time-domain characteristics. Numerical results of the performance and robustness for all system loading cases are shown in Fig. 11. It can be seen that the application of both PSS and STATCOM damping controller where the controllers are tuned by the proposed coordinated design approach gives the best response in terms of overshoot, undershoot and settling time.

5 CONCLUSIONS

Techniques such as HBMO and GA are inspired by nature, and have proved themselves to be effective solutions to optimization problems. The objective of this research is to compare the performance of these two optimization techniques for coordinated design of STATCOM and PSS. To compare the performance, the design problem of a controller is considered as on optimization problem and both HBMO and GA optimization techniques are employed for tuning the parameters of PSS. The proposed controller is applied a single machine power system subjected to the different operating conditions. The nonlinear time-domain simulation results show the effectiveness of the proposed controllers and their ability to provide good damping of the low frequency oscillations. The system performance characteristics in terms of ITAE and FD indices reveal that using both proposed HBMO and GA based controllers the overshoot, undershoot, settling time and speed deviations of the machine are greatly reduced at various operating conditions. The nonlinear time domain simulation results show that the HBMO based stabilizer provides better damping characteristics and enhances greatly the first swing stability compared to the GA based stabilizer. Moreover, the ?-based stabilizer provides better damping characteristics and enhances greatly the first swing stability compared to the C-based stabilizer.

Appendix: System Data

The nominal parameters of the case study system are listed in Tab. 4.

Table 4. System Parameters

Generator	$M = 8$ MJ/MVA	$T'_{do} = 5.044$s	$X_d = 1$pu
	$X_q = 0.6$pu	$X'_d = 0.3$pu	$D = 0$
Excitation System		$X_a = 50$	$T_a = 0.5$s
Transformers		$X_r = 0.1$pu	$X_{SDT} = 0.1$pu
Transmission Line		$X_q = 0.4$pu	
DC link Parameter		$V_{DC} = 1$pu	$C_{dc} = 1$pu
STATCOM parameter		$C = 0.25$	$\varphi = 52°$
		$K_s = 1$	$T_s = 0.05$

References

[1] Al-AWAMI, A. T.—ABDEL-MAGID, Y. L.—ABIDO, M. A.: A Particle-Swarm-Based Approach of Power System Stability Enhancement with Unified Power Flow Controller, Electric Power and Energy Systems **. 29,** (2007), 251–259.

[2] SHAYEGHI, H.—SAFARI, A.—SHAYANFAR, H. A.: PSS and TCSC Damping Controller Coordinated Design Using PSO in Multi-Machine Power System, Energ. Convers. Manage. **51** (2010), 2930–2937.

[3] PANDA, S.—PADHY, N. P. Comparison of Particle Swarm Optimization and Genetic Algorithm for FACTS-Based Controller Design: Appl. Soft Comput. **8** (2008), 1418–1427.

[4] FRAILE-ARDANUY, J.—ZUFIRIA, P. J. Design and Comparison of Adaptive Power System Stabilizers based on Neural Fuzzy Networks and Genetic Algorithms: Neurocomput. **70** (2007), 2902–2912.

[5] FOGEL, D. B.: Evolutionary Computation: Toward a New Philosophy of Machine Intelligence, 2 ed., IEEE Press, Piscataway, NJ, 2000.

[6] EBERHART, R. C.—SHI, Y.: Comparison between Genetic Algorithms and Particle Swarm Optimization (May 1998), 611–616, in IEEE Int. Conf. Evolutionary Compututation.

[7] AFSHAR, A.—HADDAD, B.—MARINO, M. A.—ADAMS, BJ.: Honey Bee Mating Optimization (HBMO) Algorithm for Optimal Reservoir Operation, J. Franklin **344** (2007), 452–462.

[8] ANDERSON, M.—FOUAD, A. A.: Power System Control and Stability, Ames, IA: Iowa State Univ. Press, 1977.

[9] KUNDUR, P.: Power System Stability and Control, McGraw-Hill, 1994.

[10] KUNDUR, P.—KLEIN, M.—ROGERS, G. J.—ZYWNO, M. S.: Application of Power System Stabilizers for Enhancement of Overall System Stability, IEEE Ttrans. PWRS **4** No. 2 (1989), 614–626.

[11] SAFARI, A.—SHAYEGHI, H.: Optimal Design of UPFC Based Damping Controller using Iteration, PSO World Academy of Science, Engineering and Technology **52** (2009), 709–714.

[12] MACHOWSKI, J.—BIALEK, J. W.: State Variable Control of Shunt FACTS Devices using Phasor Measurements, Electr. Pow. Syst. Res. **78** (2008), 39–48.

[13] MITHULANATHAN, N.—CANIZARES, C. A.—REEVE, J.—ROGRES, G. J.: Comparison of PSS, SVC and STATCOM Controllers for Damping Power Systems Oscillations, IEEE Trans. Power syst. **18** No. 2 (2003), 786–792.

[14] WANG, H. F.: Interactions and Multivariable Design of STATCOM ac and dc Voltage Control, Int. J. Elec. Power **25** (2003), 387–394.

[15] MORRIS, S.—DASH, P. K.—BASU, K. P.: A Fuzzy Variable Structure Controller for STATCOM, Electr. Pow. Syst. Res. **65** (2003), 23–34.

[16] HINGORANI, N. G.—GYUGYI, L.: Understanding FACTS: Concepts and Technology of Flexible AC Transmission Systems, Wiley-IEEE Press, 1999.

[17] WANG, H. F.: Phillips-Heffron Model of Power Systems Installed with STATCOM and Applications, IEE Proc. Gener Transm. D. **146** No. 5 (1999), 521–527.

[18] ABIDO, M. A.: Analysis and Assessment of STATCOM Based Damping Stabilizers for Power System Stability Enhancement, Electr. Pow. Syst. Res. **73** (2005), 177–185.

[19] RAHIM, A. H. M. A.—KANDLAWALA, M. F.: Robust STATCOM Voltage Controller Design using Loop Shaping Technique, Electr. Pow. Syst. Res. **68** (2004), 61–74.

[20] RAMIREZ, J. M.—CASTILLO, I.: PSS and FDS Simultaneous Tuning, Electr. Pow. Syst. Res. **68** (2004), 33–40.

[21] POURBEIK, P.—GIBBARD, M. J.: Simultaneous Coordination of Power-System Stabilizers and FACTS Device Stabilizers in a Multimachine Power System for Enhancing Dynamic Performance, IEEE Transaction on Power Systems **13** No. 2 (1998), 473–479.

[22] CAI, L. J.—ERLICH, I.: Simultaneous Coordinated Tuning of PSS and FACTS Damping Controllers in Large Power Systems, IEEE Transaction on Power Systems **20** No. 1 (2005), 294–300.

[23] SHAYEGHI, H.—SHAYANFAR, H. A.—JALILZADEH, S.—SAFARI, A.: Simultaneous Coordinated Designing of UPFC and PSS Output Feedback Controllers using PSO, J. Electr. Eng. **60** No. 4 (2009), 177–184.

[24] COLEY, D. A.: An Introduction to Genetic Algorithms for Scientists and Engineers, World Sscientific Publishing Co..

[25] GOLDBERG, D. E.: Genetic Algorithms in Search, Optimization and Machine Learning, Addison Wesley, 1989.

[26] NIKNAM, T.: Application of Honey Bee Mating Optimization on State Estimation of a Power Distribution System Including Distributed Generators, J. Zhejiang. Univ. sc. A **9** (2008), 1753–1762.

Received 31 March 2012

Amin Safari received the BSc and MSc degrees in Electrical Engineering in 2007 and 2009, respectively. Currently, he is a PhD student of Power Electrical Engineering, Iran University of Science and Technology, Tehran, Iran. He is a Lecturer in the Department of Electrical Engineering, Ahar branch, Islamic Azad University. His areas of interest in research are application of artificial intelligence to power system control design, FACTS device, power system modeling and analysis and fuzzy logic control.

Ali Ahmadian was born in Ahar, Iran, in May 12, 1988. He received his BS degree from the Islamic Azad University, Iran 2010. Currently, he is MSc student of power electrical engineering at K.N. Toosi university of technology, Tehran, Iran. His research interests are dynamic and stability of power systems, reactive power control, renewable energy and Application of Artificial Intelligence and robust control theory to power system stabilization controller design.

Masoud Aliakbar Golkar was born in Tehran Iran in 1954. He received his BSc degree from the Sharif University of Technology, Tehran-Iran in 1977, MSc from the Oklahoma State University, US, in 1979, and his PhD degree from the Imperial College of Science, Technology, and Medicine (The University of London, UK) in 1986, all in Electrical Engineering (Power Systems). His employment experience included working at K.N. Toosi University-Tehran, since 1979, Advisor to Tehran Electricity board, Shiraz Electricity Board, and Bandar Abbas Electricity Board in the field of Distribution Systems, Head of research group at Electric Power Research Center in the field of Reactive Power Control, and Distribution System Studies from 1987–1997, Senior Lecturer at Curtin University of Technology in Malaysia from Jan. 2002 to July. 2005. Now he is an Associate Professor at K.N. Toosi University of Technology in Tehran-Iran.