*Journal of* ELECTRICAL ENGINEERING, VOL. 57, NO. 4, 2006, 205–210

# INPUT OUTPUT LINEARIZATION AND SLIDING MODE CONTROL OF A PERMANENT MAGNET SYNCHRONOUS MACHINE FED BY A THREE LEVELS INVERTER

**Massoum Ahmed — Fellah M. Karim — Meroufel Abdelkader — Bendaoud Abdelber** *

In this paper, we present the linearizing control technique controlled by a variable structure regulator with sliding mode applied to the permanent magnet synchronous machine (PMSM). It permits decoupling and linearizing the system without taking into accounts the flux orientation. The nonlinear control (NLC) applied to the PMSM decompose the system into two mono variable, linear and independent subsystems. The speed and the $I_d$ current control is carried out by sliding mode regulators. The analysis of the results obtained by this type of nonlinear regulator shows the robustness characteristic with respect to the load perturbations and the parametric variations. A qualitative analysis of the evolution of the principal variables describing the behaviour of the global system (PMSM-Inverter (PWM)-Control) is developed by several tests of digital simulation in last stage.

K e y w o r d s: PMSM, nonlinear control, sliding mode control, three levels inverter

## 1 INTRODUCTION

The vector control technique permits to compare the PMSM to the separate excitation DC machine. The vector flux must be concentrated on the $D$ axis with $I_d$ current null. However the exact knowledge of the rotor flux position poses a precision problem [1]. The nonlinear control technique which makes abstraction with the flux orientation permits to solve this problem. It also allows, by a nonlinear state negative feedback, to completely decouple the system in two linear and mono variable subsystems [2, 3]. Thus, it is possible to control independently the speed and the forward current $I_d$. The traditional control algorithms (PI or PID) prove to be insufficient where the requirements in performances are very severe. Several methods of control are proposed in the technical literature, among them the control with variable structure by slipping mode which held our attention by the simplicity of its adjustment algorithm and which is the objective of our work. The work is composed of PMSM modeling in the Park frame and an overview of the nonlinear control technique in order to decouple the machine model. Then, a brief outline on the sliding mode control and its application to the speed and the $I_d$ current control of the PMSM supplied with the three levels inverter. In the last step, a comment on the results obtained in simulation and a conclusion where we emphasize the interest and the contribution of this method of control.

## 2 THE PMSM NONLINEAR MODEL

With the simplifying assumptions relating to the PMSM, the model of the machine expressed in the reference frame of Park, in the form of state is written as [2, 3].

$$\dot{\mathbf{x}} = \mathbf{F}(\mathbf{x}) + \sum_{i=1}^{m} \mathbf{g}_i(\mathbf{x}) \cdot \mathbf{U}_i \tag{1}$$

$$\mathbf{x} = \begin{pmatrix} x_1 \\ x_2 \\ x_3 \end{pmatrix} = \begin{pmatrix} I_d \\ I_q \\ \Omega \end{pmatrix}; \quad \mathbf{U}_i = \begin{pmatrix} U_1 \\ U_2 \end{pmatrix} = \begin{pmatrix} U_d \\ U_q \end{pmatrix}$$

with

$$\mathbf{g}_1 = \begin{pmatrix} \frac{1}{L_d} \\ 0 \\ 0 \end{pmatrix}; \; g_2 = \begin{pmatrix} 0 \\ \frac{1}{L_q} \\ 0 \end{pmatrix} \tag{2}$$

$$\mathbf{F}(\mathbf{x}) = \begin{pmatrix} f_1(\mathbf{x}) \\ f_2(\mathbf{x}) \\ f_3(\mathbf{x}) \end{pmatrix} = \begin{pmatrix} -\frac{R}{L_d}x_1 + \frac{pL_q}{L_d}x_2x_3 \\ -\frac{R}{L_q}x_2 - \frac{pL_d}{L_q}x_1x_3 - \frac{p.PHI\_f}{L_q}\; x_3 \\ -\frac{f}{J}x_3 + \frac{p(L_d-L_q)}{J}x_1x_2 + \frac{p.PHI\_f}{J}\; x_2 - \frac{T\_L}{J} \end{pmatrix}. \tag{3}$$

The variables to be controlled are the current $I_d$ and the mechanical speed $\Omega$.

$$Y(\mathbf{x}) = \begin{pmatrix} y_1(\mathbf{x}) \\ y_2(\mathbf{x}) \end{pmatrix} = \begin{pmatrix} h_1(\mathbf{x}) \\ h_2(\mathbf{x}) \end{pmatrix} = \begin{pmatrix} x_1 \\ x_2 \end{pmatrix} = \begin{pmatrix} I_d \\ \Omega \end{pmatrix} \tag{4}$$

* EE Department, Djillali Liabes University, Sidi Bel Abbes 22000, Algeria, E-mail: ahmassoum@yahoo.fr.

ISSN 1335-3632 

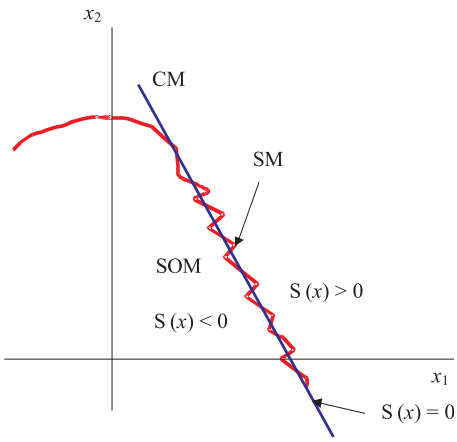


**Fig. 1.** Trajectory modes in the phase plan. CM — convergence mode, SM — sliding mode, SOM — steady operation mode

## 3 THE PMSM INPUT–OUTPUT LINEARIZATION

The linearization condition that permits to verify if a nonlinear system admits an input output linearization is the relative degree order of the system [1, 4].

### 3.1 Relative degree

The relative degree of an output is the number of times that it is necessary to derive the output to reveal the input $U$.

- Relative degree of the $I_d$ current:

$$\dot{y}_1(\mathbf{x}) = L_f h_1(\mathbf{x}) + L_{g1} h_1(\mathbf{x})\, U_d \tag{5}$$

with

$$\begin{aligned} L_f h_1(\mathbf{x}) &= f_1(\mathbf{x}) \\ L_{g1} h_1(\mathbf{x}) &= [g_1, 0] \end{aligned} \tag{6}$$

The relative degree of $y_1(\mathbf{x})$ is $r_1 = 1$.

- Relative Degree of the mechanical speed $\Omega$.

$$\begin{aligned} \dot{y}_2(\mathbf{x}) &= L_f h_2(\mathbf{x}) \\ \ddot{y}_2(\mathbf{x}) &= L_f^2 h_2(\mathbf{x}) + L_g L_f h_2(\mathbf{x}) U_q \end{aligned} \tag{7}$$

with

$$\begin{aligned} L_f h_2(\mathbf{x}) &= f_3(\mathbf{x}) \\ L_f^2 h_2(\mathbf{x}) &= c_2 x_2 f_1(\mathbf{x}) + f_2(\mathbf{x})(c_3 + c_2 x_1) + c_1 f_3(\mathbf{x}) \\ L_g L_f h_2(\mathbf{x}) &= [\, c_2 x_2 g_1 \quad g_2(c_3 + c_2 x_1)\,] \end{aligned} \tag{8}$$

The relative degree of $x_2(\mathbf{x})$ is $r_2 = 2$.

- Relative Degree of the system

The total degree of the system is equal to order $N(r = r1 + r2 = N = 3)$. The system is exactly linearizable.

### 3.2 Decoupling matrix

The matrix defining the relation between the physical input $(U)$ and the output derivative $(Y(x))$ is given by the expression (9).

$$\begin{pmatrix} \dot{y}_1(\mathbf{x}) \\ \ddot{y}_2(\mathbf{x}) \end{pmatrix} = \begin{pmatrix} \frac{d}{dt} I_d \\ \frac{d^2}{dt^2}\Omega \end{pmatrix} = \mathbf{A}(\mathbf{x}) + \mathbf{D}(\mathbf{x}) \begin{pmatrix} U_d \\ U_q \end{pmatrix} \tag{9}$$

with

$$\mathbf{A}(\mathbf{x}) = \begin{pmatrix} f_1(\mathbf{x}) \\ \frac{p\,(L_d - L_q)}{J}\, x_2\, f_1(\mathbf{x}) + \quad (\frac{p\,Phi\_f}{J} + \\ \frac{p(L_d - L_q)}{J} x_1)\, f_2(\mathbf{x}) - \frac{f_r}{J} f_3(\mathbf{x}) \end{pmatrix}$$

$$\mathbf{D}(\mathbf{x}) = \begin{pmatrix} g_1 & 0 \\ g_1\, \frac{p\,(L_d - L_q)}{J} x_2 & (\frac{p\,Phi\_f}{J} + \frac{p(L_d - L_q)}{J} x_1) g_2 \end{pmatrix} \tag{10}$$

### 3.3 The model linearization

To linearize the behaviour input-output of the machine in closed loop, one applies the nonlinear state feedback given by equation (11) [1, 4]:

$$\begin{pmatrix} U_d \\ U_q \end{pmatrix} = \mathbf{D}^{-1}(\mathbf{x}) \left[ \begin{pmatrix} V_1 \\ V_2 \end{pmatrix} - \mathbf{A}(\mathbf{x}) \right] \tag{11}$$

The decoupling matrix determinant $D - 1(X)$ is no null (permanent magnet machine). The application of the linearizing law (6) on the system (5) led to two decoupled linear systems.

$$\begin{pmatrix} \dot{y}_1(\mathbf{x}) \\ \ddot{y}_2(\mathbf{x}) \end{pmatrix} = \begin{pmatrix} \frac{d}{dt} I_d \\ \frac{d^2}{dt^2}\Omega \end{pmatrix} = \begin{pmatrix} V_1 \\ V_2 \end{pmatrix} \tag{12}$$

## 4 DESIGN OF THE SLIDING MODE CONTROL

This technique consists in bringing back the state trajectory of the system towards the sliding surface and to make commutate using a logic of suitable commutation up to the equilibrium point [4, 5, 6]. This trajectory consists of three distinct parts (Fig. 1).

The sliding mode regulators design deals with the problems of stability and the desired performances in a systematic way.

The implementation of this control method requires mainly three stages:

- Surface choice.
- Establishment of the convergence conditions.
- Determination of the control.

### 4.1 The sliding surface choice

The surface $S(X)$ represents the desired dynamic behaviour of the system. J. J Slotine proposes a form of general equation to determine the sliding surface which ensures the convergence of a variable towards its desired value [4, 5, 6]:

$$S(\mathbf{x}) = (\frac{\partial}{\partial t} + \lambda_x)^{r-1} e(\mathbf{x}) \tag{13}$$

with

$e(\mathbf{x})$ — variation of the variable to be regulated

$e(\mathbf{x}) = \mathbf{x}_{\text{ref}} - \mathbf{x}$

$\lambda_x$ — Positive constant which interprets the bandwidth of desired control

$R$ — relative degree; equal to the number of times that it is necessary to derive the output to reveal the control

$S(\mathbf{x}) = 0$ — is a linear differential equation whose single solution is $e(\mathbf{x}) = 0$

### 4.2 Condition of convergence

It is the first convergence condition which permits dynamic system to converge towards the sliding surfaces. It is a question of formulating a positive scalar function $V(X) > 0$ for the system states variables which are defined by the following Lyapunov function:

$$V(\mathbf{x}) = \frac{1}{2} S^2(\mathbf{x}) \tag{14}$$

To cause the Lyapunov function decreases, it is necessary to ensure that its derivative is negative. This is checked if:

$$S(\mathbf{x}).\, S(\mathbf{x}) < 0 \tag{15}$$

### 4.3 Control Calculation

Once the sliding surface chosen, as well as the convergence criterion, it remains to determine the necessary control to bring the variable to be controlled towards the surface and then towards its equilibrium point by maintaining the sliding mode existence condition. One of the essential assumptions in the systems design with variable structure controlled by the sliding modes is that the control must commutate between $u_{max}$ and $u_{min}$ instantaneously.

#### 4.3.1 Variables control

Consequently, the structure of a controller consists of two parts; a first concerning the exact linearization and a second stabilizing. The last is very important in the sliding mode control technique because it is used to eliminate the model inaccuracy effects and to reject the external disturbances. Hence:

$$u(t) = u_{eq}(t) + u_n \tag{16}$$

$u_{eq}(t)$ — Corresponds to the equivalent control suggested by Utkin [4, 5, 6]. It is calculated on the basis of the system behaviour along the sliding mode described by:

$$\dot{S}(\mathbf{x}) = 0 \tag{17}$$

The equivalent control can be interpreted like the modulated mean value; continuous value that the control takes during the fast commutation between $u_{max}$ and $u_{min}$.

The control is given to guarantee the attractivity of the variable to be controlled towards the sliding surface and to satisfy the convergence condition.

$$S(\mathbf{x}).\dot{S}(\mathbf{x}) < 0 \tag{18}$$

#### 4.3.2 Analytical expression of the control

We are interested to the calculation of the equivalent control and thereafter to the calculation of the system attractive control defined in the state space by the equation

$$\dot{\mathbf{x}}(t) = \mathbf{f}(\mathbf{x}, t) + \mathbf{g}(\mathbf{x}, t)\, \mathbf{u}(t) \tag{19}$$

The vector $\mathbf{u}$ is composed of $u_{eq}$ *et* $u_n$ $\mathbf{u}(t) = u_{eq}(t) + u_n$

### 4.4 The regulators Synthesis

#### 4.4.1 The $i_d$ current regulator

For $i_d$ current the surface $S_1$ must have an order relative degree equal to 1, it is given by the following expression

$$S_1 = e_1 \tag{20}$$

The variable error is $e_1 = i_{dref} - i_d$, and consequently, its temporal derivative is given by

$$\dot{S}_1 = \dot{e}_1 \tag{22}$$

It is necessary to make surface $S_1$ attractive and invariant. Imposing on the following dynamics

$$\dot{S}_1 = -m_1 \text{sign} S_1 \tag{23}$$

Where $m_1$ is a positive constant, one obtains

$$\dot{S}_1 = -m_1 \left| S_1 \right| \leqslant 0 \tag{24}$$

Thus the surface $S_1$ converges asymptotically towards zero, in the same way the current $i_d$ towards its reference $i_{\text{dref}}$. Consequently, the control on the regulator output becomes

$$v_1 = m_1 \text{sign} + S_1 \tag{25}$$

Where $e_1$ and $\dot{e}_1$ indicates respectively the speed error and its derivative, while $\dot{i}_{\text{dref}}$ indicates the temporal derivative of the current reference. When the sliding mode is reached the surface is cancelled and consequently its derivative also $\dot{S}_1 = 0$. During the convergence mode

$$S(i_d)\dot{S}(i_d) \leqslant 0 \tag{26}$$

#### 4.4.2 Speed regulator

For speed, surface $S_2$ must have an order relative degree equal to 2, hence

$$S_2 = k_2 e + \dot{e} \tag{27}$$

Consequently its temporal derivative is given by

$$\dot{S}_2 = k_2 \dot{e} + \ddot{e} \tag{28}$$

It is necessary to make surface attractive and invariant.

Imposing on the following dynamics

$$\dot{S}_2 = -m_2 sign S_2 \tag{29}$$

Where $m_1$ is a positive constant, one obtains

$$\dot{S}_2 = -m_2 \left| S_2 \right| \leqslant 0 \tag{30}$$

Thus surface $S_2$ converges asymptotically towards zero, as well as the speed $\Omega$ towards its reference $\Omega_{\text{ref}}$.

The regulators outputs are in this case

$$v_2 = k_2 \dot{e} + m_2 sign S_2 \tag{31}$$

with $e_2 = \Omega_{ref} - \Omega$, or $e_2$ and $\dot{e}_2$ indicates respectively the speed error and its derivative. $\dot{\Omega}_{\text{ref}}$ indicates the temporal derivative of the reference speed.

### 4.5 Estimate of the load torque

The load torque is hardly measurable what obliges us to use its estimate in the control expression. The method suggested by lePioufle permits to estimate in real time the load couple [2]. Figure 3 illustrates the estimator principle.

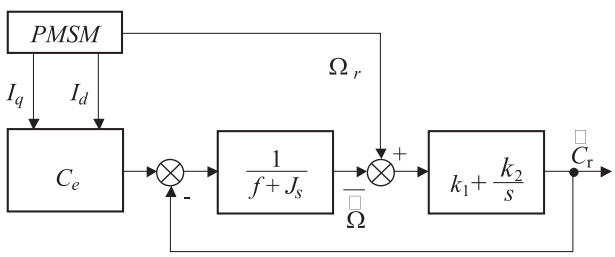


**Fig. 2.** Load torque Estimator

The error between measured speed and estimated speed is presented as an input of a regulator PI whose output is

$$\tilde{T}\_L = \frac{1 + \frac{k_1}{k_2} s}{1 + \frac{1+k_1}{k_2} s + \frac{1}{k_2} s^2} T\_L \tag{32}$$

and $k_1$ and $k_2$ are determined by the poles placement method.

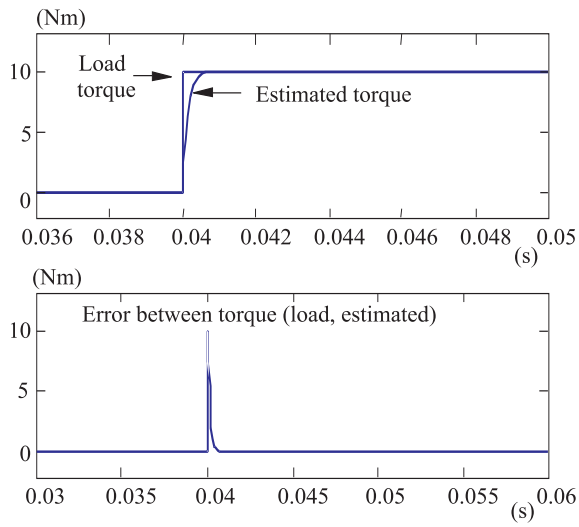


**Fig. 3.** The estimator Response characteristic

The estimated torque follows with a good precision the load torque variations static mode while in dynamic mode it presents a light shift due to the estimator reaction.

## 5 THE THREE LEVELS INVERTER MODELLING

The NPC three levels inverter of tension consists of twelve pairs of transistors - diodes that generate levels of amplitude tension . It is generally controlled by the PWM. The simple tension of each phase is entirely defined by the state of the four transistors (Switches) constituting each arm. The median diodes of each arm permits to have the zero level of the inverter output voltage. Only three sequences of operation are retained and done in work. Each arm of the inverter is modelled by a perfect switch with three positions [7] (- 1, 0, 1) (Fig.4). The operation of the converter is based on the PWM strategy with two carriers. The intersections of these last with the modulating signals determine the instants and the durations of closing or opening of the switches of each arm. The three-phase simple power provided by the inverter is determined by the following relation

$$[V] = \frac{U}{6} [C] \ [S] \tag{33}$$

with

$$(V_{an} \ \ V_{bn} \ \ V_{cn})^t = [V] \ ; \ (S_1 \ S_2 \ S_3)^t = [S] \tag{34}$$

$$[C] = \begin{pmatrix} 2 & -1 & -1 \\ -1 & 2 & -1 \\ -1 & -1 & 2 \end{pmatrix}$$

$$S_i = T_{i1} T_{i2} - T_{i3} T_{i4} \ ; \quad (i = 1, 2, 3)$$

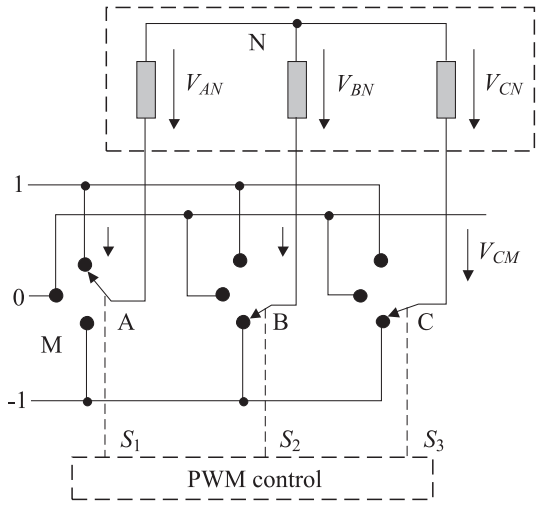


**Fig. 4.** Functional diagram of the Multilevel Inverter

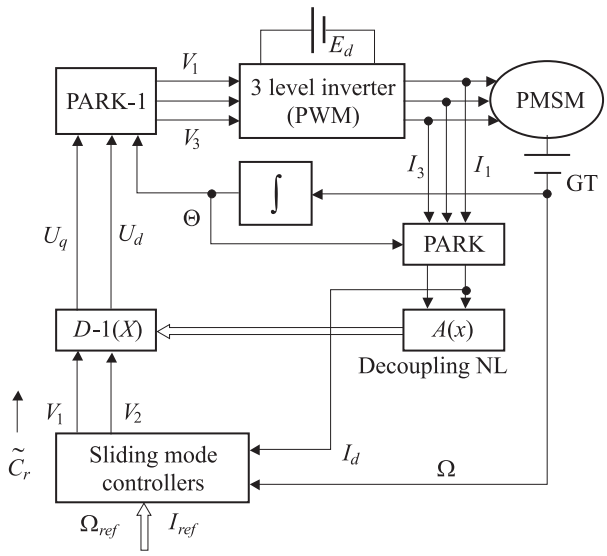


**Fig. 5.** General diagram of the sliding mode control with NL decoupling of the PMSM

$S_i$ — Logic signals (PWM)
$F_i$ — Switching functions.

## 6 SIMULATION

The decoupling based on the nonlinear control of the PMSM supplied with a three levels inverter of tension (PWM) and with the sliding mode control (Fig.5), is tested by digital simulation.

Figure 6 represents the performances of the control device proposed for a speed level of 100 rd/s with a load application of 8 Nm between 0.1 s and 0.2 s followed by an inversion of speed rotation -100 rd/s at 0.3 s. The control performances are very satisfactory. The dynamics of continuation is not affected during the variation of the load couple. The rejection of disturbance is very efficient. The NL decoupling is ensured for the nominal load. One notices, for speed, a fast starting without an overshoot and static error. The $I_d$ current is maintained null and independent of the torque. The fluctuations recorded on the currents are due to the inverter control.

## 7 CONCLUSION

We presented in this paper the sliding mode control performances for a PMSM decoupled by a NL state feedback and associated to a three levels inverter (PWM).

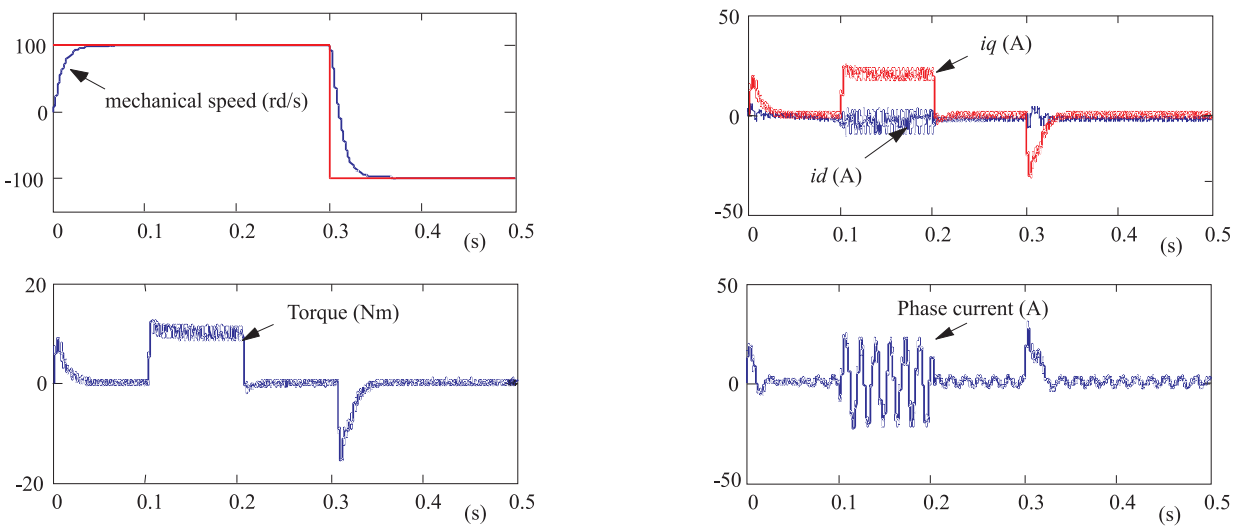


**Fig. 6.** Answers of the MSAP to a level speed of 100 rd/s followed by an application of the load (0.1 s with 0.2 s) and of an inversion speed - 100 rd/s to 0.3 s

The results obtained show the applicability of this control technique in the field of the electric drives. The objectives of continuation and disturbance rejection are very good. Decoupling is maintained even with the load variations. The input output linearization with NL state feedback permits to bring the behaviour of the closed loop system of a NL system to a decoupled linear system without passing by the exact knowledge of the rotor flux position. This control strategy provided a stable system with satisfactory performances either with load variations or loadless.

## Nomenclature

$U_d$ — Stator voltages in the direct and quadratic axes
$U_q$ — Current and Inductance in the direct axis
$I_q, L_d$ — Current and Inductance in the quadratic axis
$R$ — Stator resistance
$\Omega$ — Mechanical speed of motor
$\Phi_f$ — Flux created by the motor magnets
$J$ — Moment of inertia
$f$ — Viscous-friction coefficient
$T_L$ — Load torque
$T$ — Electromagnetic torque

## Machine parameters

$L_d = 1.4\,\mathrm{mH}$; $L_q = 2.8\,\mathrm{mH}$; $\Phi\_f = 0.12\,\mathrm{Wb}$; $P = 4$;
$J = 1.110^{-3}\,\mathrm{kgm}^2$; $f = 1.410^{-3}\,\mathrm{Nm/rds}^{-1}$;
$T = 8.5\,\mathrm{Nm}$; $R = 0.6\,\Omega$; $I_{qn} = 20\,\mathrm{A}$.

## References


[1] LEPIOUFLE, B.—GEORGIOU, G—LOUIS, I. P.: Application des commandes NL pour la rgulation en vitesse ou en position de la machine synchrone autopilote, Applied physics revue 1990,, 517-527.

[2] LEPIOUFLE, B.: Comparison of speed non linear control strategies for the servomotor, electric machines and power systems, 1993,.

[3] PILLAY, P.—KRISHNAN, R.: Modelling of permanent motor drives, IEEE Trans On Elect. **35** No. 04, 265-273, Nov88.

[4] SLOTINE, J. J.: Applied non linear control, Englewood Cliffs NJ. Tice Hall 1991.

[5] NAMUDURI, C.—SEN, P. C.: A servo control system using a self controlled synchronous motor (SCSM) with sliding mode controller, IEEE IAS Annuel Meeting 1986, 56-65.

[6] EDWARD, Y.—HO, Y,—SEN, P.: A microcontroller based induction motor drive system using variable structure strategy with decoupling, IEEE Trans On Ind Elect **37** No. 03 June 1990, 227-235.

[7] BOSE, B. K.: Power electronics and AC drives, Printice Hall New-York 1986.


Received 10 July 2005


**Massoum Ahmed** was born in 1959 in Mśirda Fouaga, Tlemcen, Algeria. He received his BS degree in electrical engineering from the Electrical Engineering Institute (INELEC) of Boumerdes 1985 and the MS degree from the Electrical Engineering Institute of Sidi Bel-Abbes University in 2004 where he is currently Professor of electrical engineering. He is a member in Intelligent Control Electrical Power System Laboratory (ICEPS).

**Fellah Mohamed Karim** was born in Oran, Algeria, in 1963. He received the Eng. degree in Electrical Engineering from University of Sciences and Technology, Oran, Algeria, in 1986, and the Ph.D. degree from National Polytechnic Institute of Lorraine (Nancy, France) in 1991. Since 1992, he is Professor at the University of Sidi-bel-Abbes (Algeria) and Director of the Intelligent Control and Electrical Power Systems Laboratory at this University. His current research interest includes power electronics, HVDC links, and drives.

**Abdelkader Meroufel** was born in Sidi Bel-Abbes (Algeria) in 1954. He received his BS degree in electrical engineering from the USTOran (Algeria) in 1980, the MS degree from the same University (USTO) in 1990 and the PhD degree from the Electrical Engineering Institute of University of Sidi Bel-Abbes (Algeria) in 2004. He is currently Professor of electrical engineering in this University. He is a member of ICEPS (Intelligent Control Electrical Power System) Laboratory. His research interests are robust control of electrical machines.

**Abdelber Bendaoud** was born in Tlemcen (Algeria) in 1958. He received his BS degree in electrical engineering from the USTOran (Algeria), the MS and the PhD degree from the Electrical Engineering Institute of University of Sidi Bel-Abbes (Algeria). He is currently Professor of electrical engineering in this University. He is a member of ICEPS (Intelligent Control Electrical Power System) Laboratory. His research interests are robust control of electrical machines.