sciendo

Journal of ELECTRICAL ENGINEERING, VOL 69 (2018), NO6, 477–480

COMMUNICATIONS

Evaluation of frame-induced compressive stress on the magnetic properties of stator cores using the excitation inner core method

Mohachiro Oka*, **Masato Enokizono****

To improve the efficiency of electric motors, we developed the excitation inner core method to evaluate the magnetic properties such as the iron loss of the actual stator core. After preparing two stator cores with a frame, we examined the frames influence of compressive stress by applying the standard and small excitation inner core methods to evaluate the iron loss of both stator cores having a frame. After removing the frames of the two stator cores, we evaluated the iron loss of two stator cores without the frames again by applying both methods.

K e y w o r d s: iron loss, hysteresis loss, eddy-current loss, actual stator core, motor frame, compressive stress

1 Introduction

Recently, the applications of motors have expanded into new kinds of equipment such as drones, rovers, and robots. Increasing motor efficiency has become an important research topic. It is well known that the iron loss of the stator core, which has a complex shape, increases by compressive and residual stress caused by a frame [1-5]. To solve the problem, the technology that measures the iron loss of an actual stator core is necessary. However, a general method of evaluating the iron loss of the stator core has not been yet established. Therefore, we developed the excitation inner core method to evaluate the circumferential and axial distribution of the iron loss of the actual stator core [6-8]. In this study, we are presenting two variations on of the excitation inner core method. Moreover, we evaluated the influence that the frame exerted on the iron loss of the stator core using these two methods.

2 Excitation inner core method, specimen, and evaluation of iron loss

2.1 Two kinds of the excitation inner core method

Figure 1 shows schematic diagrams of two kinds of the excitation inner core method. Figure 1 (a) shows the standard excitation inner core method (The standard core method). The thickness of the standard excitation inner core was 65 mm. Figure 1 (b) shows the small excitation inner core method (the small core method). The thickness of the small excitation inner core was 10 mm. The two kinds of excitation inner core were made of a silicon steel sheet (50A350) and laminated in the same direction as a stator core. The opening angle of their feet was 60-degrees. To avoid generating interlinkage magnetic flux in two excitation cores, two excitation coils were connected each other.

2.2 Specimens

We prepared two stator cores with a frame. The iron loss of the two stator cores having the frame was eval-

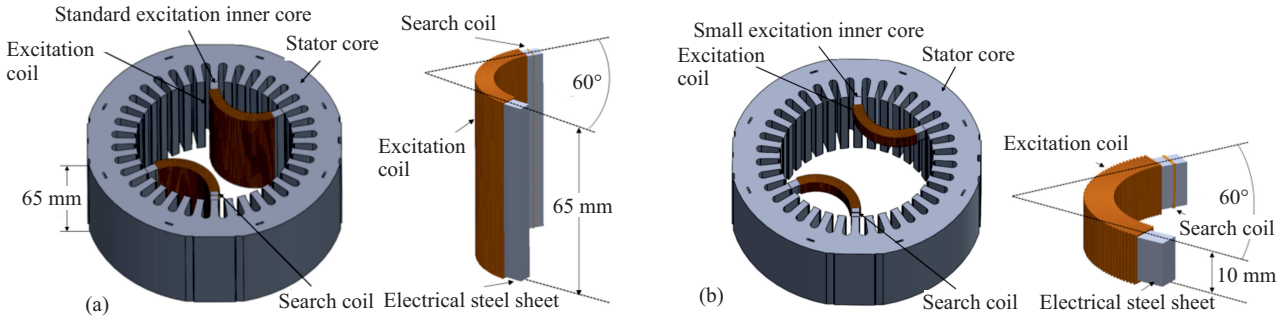

Fig. 1. Parts location diagrams of two kinds of the excitation inner core method

* National Institute of Technology, Oita College, 1666 Maki, Oita-city, Oita, 870-0152, Japan, oka@oita-ct.ac.jp, ** Vector Magnetic Characteristic Technical Laboratory, 533 Joi Usa-city, Oita, 879-0442, Japan, enoki@oita-u.ac.jp

DOI: 10.2478/jee-2018–0080, Print (till 2015) ISSN 1335-3632, On-line ISSN 1339-309X

uated using the standard and small core method. Afterwards, the frame was removed from both stator cores. The iron loss of the two stator cores without the frame was again evaluated using both methods. To examine the influence of two frames on the iron loss, we compared the iron loss in both cases. We used the totally-enclosed fan-cooled type three-phase induction motor stator core with 36 teeth (1. 5 kW, 200 V, 50 Hz or 60 Hz in common, and 4-poles) as a specimen. The stator core was 65 mm thick, with an outside diameter of 157 mm, and an inside diameter of 95 mm.

The compressive stress that the stator core received from the frame was calculated by using the finite element method [9] . The condition of the calculation was as follows. The frame was imitated in the aluminum (A2027) cylinder of 10 mm in thickness. Moreover, the stator core was imitated by the carbon steel for the ordinary structure. A shrink-fitted margin was 20 μm. In the numerical result, magnitude of compressive stress was 10-20 MPa on the stator core.

2.3 Evaluation of iron loss (W_i)

The iron loss W_i (W/kg) of the stator core was evaluated using (1), where H_ex (A/m) and B_ex (T) are the magnetic field strength and magnetic flux density of a stator core, respectively and ρ in (kg/m^3) is the density of the core material while T (s) is the period of the excitation current. Further, $I_\mathrm{ex}, N_\mathrm{e}, L_\mathrm{e}, N_\mathrm{s}$, and S (m^2), are the excitation current, the number of turns of the excitation coil, the effective magnetic path length, the number of turns of the search coil, and the sectional area of the excitation inner core, respectively and v_s is the induced voltage in the search coil. To evaluate W_i, we estimated L_e using the distribution of the magnetic flux density in the stator core which was analyzed using the 2D FEM [6]. The hysteresis loss W_h (W/kg) and the eddy-current loss W_e (W/kg) were calculated by the dual frequency separation method using W_i50 when f_ex is 50 Hz and W_i100 when f_ex is 100 Hz.

$$
\begin{aligned}
W_i &= \frac{1}{\rho T}\int_T H_\mathrm{ex}\frac{\mathrm{d}B_\mathrm{ex}}{\mathrm{d}t}\,\mathrm{d}t,\\
H_\mathrm{ex} &= \frac{N_\mathrm{e} I_\mathrm{ex}}{L_\mathrm{e}},\\
B_\mathrm{ex} &= -\frac{1}{N_\mathrm{S}}\int v_s \mathrm{d}t
\end{aligned}
\tag{1}
$$

3 Measurement system, and conditions

3.1 Measurement system

The block diagram of the measurement system to evaluate $W_\mathrm{i}, W_\mathrm{h}$, and W_e is shown in Fig. 2. The waveform of the excitation voltage was controlled by feedback so that the excitation magnetic flux density (B_ex) in the excitation inner core, became a sinusoidal wave. The I_ex was measured from the voltage generated in the shunt resistor. Additionally, W_i was calculated using measured v_s and I_ex. In this experiment, $B_\mathrm{ex,max}$ was 1.5 T, and f_ex was 50 and 100 Hz.

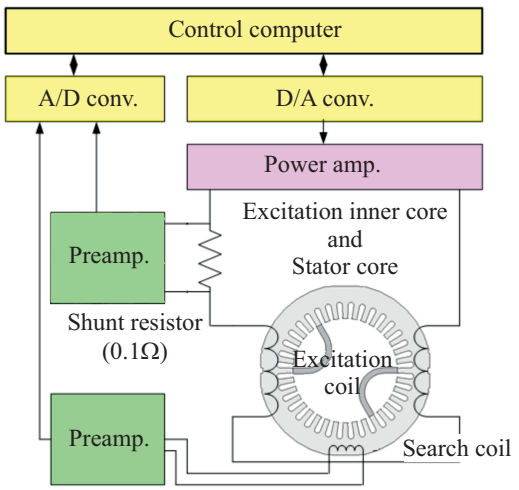

Fig. 2. Measurement system

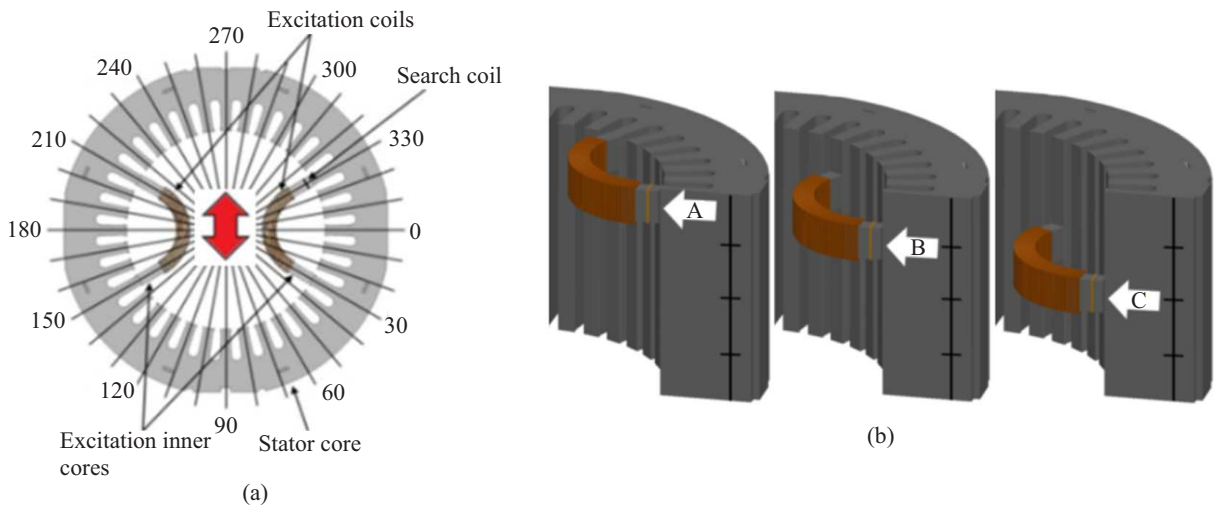

Fig. 3. Measurement position

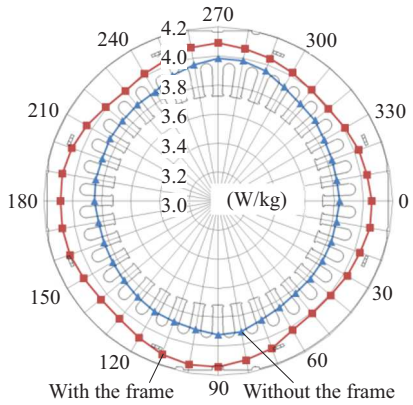

Fig. 4. Distribution of W_{i} (the standard core method)

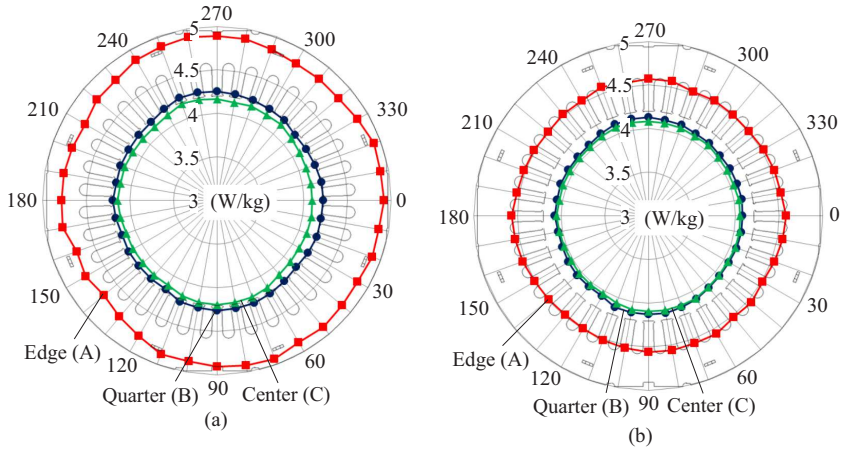

Fig. 5. Circumferential and axial distribution of W_{i} (the small core method): (a) – with the frame, and (b) – without the frame

3.2 Measured circumferential and axial position

Figure 3(a) shows measured the circumferential positions. The circumferential distribution of W_{i} was measured in 10 degree steps, as shown in Fig. 3(a). The axcial distribution of W_{i} was measured at the edge (A), the quarter (B), and the center (C) of the stator core as shown in Fig. 3(b).

4 Results and discussions

4.1 Circumferential distribution of W_{i}, W_{h}, and 5 with and without frames using the standard core method

Figure 4 shows the circumferential distribution of W_{i} with the frame and without frames, when $B_{\mathrm{ex,max}}$ was 1.5 T, and f_{ex} was 50 Hz. When the stator core did not have frames, W_{i} in the vicinity of 90 and 270 degrees was greater than that at other angles, due to the rolling direction of the stator core. When the stator core had frames, W_{i} in the vicinity of 0, 90, 180, and 270 degrees was greater than that at other angles, due to the rolling direction of the stator core and compressive stress caused by the frame. We propose that the compressive stress from the frame increased W_{i} in those parts.

4.2 Circumferential and axial distribution of W_{i} with and without frames using the small core method

Figure 5(a) shows the circumferential and axial distribution of W_{i}, when the stator core had frames, whereas Fig. 5(b) shows the circumferential and axial distribution of W_{i} without frames. In the latter case, $B_{\mathrm{ex,max}}$ was 1.5 T, and f_{ex} was 50 Hz. As Fig. 5 indicates, W_{i} with the frame was greater than that without frames at all three axial measurement positions. W_{i} at the center of the stator core changed by about 2.0% with and without the frame. At the edge of the stator core, W_{i} changed by about 6.2%.

4.3 Circumferential and axial distribution of $W_{\mathrm{i}}, W_{\mathrm{h}}$, and W_{e} at the edge of the stator core with and without the frame using the small core method

Figure 6 shows the circumferential distribution of $W_{\mathrm{i}}, W_{\mathrm{h}}$, and W_{e} at the edge (A), when B_{exmax} was 1.5 T, and f_{ex} was 50 Hz. In Fig. 6(a) and 6(b), W_{i} and W_{h} with the frame were greater than that without the frame. As both figures suggest, compressive stress was a cause of this difference. As Fig. 6(c) shows, W_{e} slightly increased at the edge. As that Figure suggests, compressive stress hardly influences W_{e}.

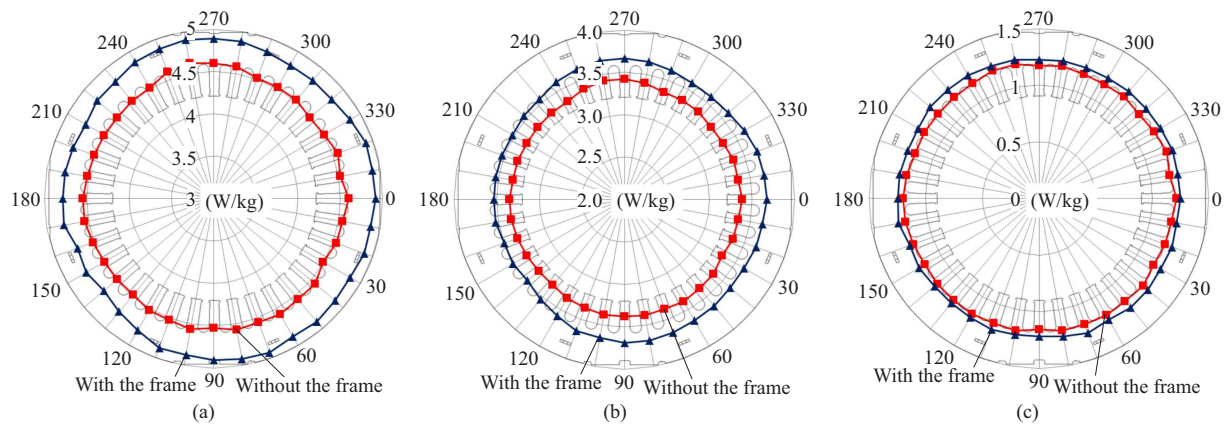

Fig. 6. Circumferential and axial of at the edge of the stator core with and without the frame(the small core method): (a) – W_{i}, (b) – W_{h}, and W_{e}

5 Conclusions

In this paper, the circumferential and axial distributions of the iron loss of actual stator cores with and without the frame were measured using the standard and small excitation inner core methods. Consequently, we attained the following results.

- The proposed excitation inner core methods clearly evaluated the iron loss of the actual stator core.
- The compressive stress caused by the frame which installed on the stator core greatly influenced the iron loss of the stator core;
- Iron loss increased greatly at the edge, which indicates that the compressive stresses at the edge of the stator core was greater than that at the center.

Acknowledgements

This work was supported in part by the Japan Society for the Promotion of Science under Grant No.17K06480.

References

[1] N. Takahashi and D. Miyagi, "Effect of stress on iron loss of motor core", *IEMDC*, 2011 IEEE International, pp. 469-474, (2011).

[2] A. J. Moses and H. Rahmatizadeh, "Effect of Stress on Iron Loss an Flux Distribution of an Induction Motor Stator Core", *IEEE Trans. on Magnetics*, vol. 25, no. 5, pp. 4003-4005, (1989).

[3] A. J. Moses, and H. Rahmatizadeh, "Economic aspects of minimising the effects of mechanical stress induction motor stator core", *Journal of Magnetism and Magnetic Matrials*, vol. 112, pp. 435-438, (1992).

[4] A. Schoppa, J. Schneider and C. -D. Wuppermann, "Influence of the manufacturing process on the magnetic properties of non-oriented electrical steel", *Journal of Magnetism and Magnetic Materials*, vol. 215-216, pp. 215-216, (2000).

[5] A. Krings, M. Cossale, J. Soulard and A. Boglietti, "Manufacturing influence on the magnetic properties and iron losses cobalt-iron stator cores for electrical machines", *2014 IEEE Energy Conversion Congress and Expositions*, pp. 5595-5901, 2014.

[6] M. Oka, T. Ogasawara, N. Kawano and M. Enokizono, "Estimation of Suppressed Iron Loss by Stress-Relief Annealing an Actual Induction Motor Stator Core Using the Excitation Inner Core Method", *IEEE Transactions on Magnetics*, vol. 50, no. 11, 8202904, (2014).

[7] M. Oka, K. Shimada, M. Kawano and M. Enokizono, "Evaluation of the Iron Loss Distribution of the Actual Stator Core Using Small Excitation Inner Cores", *Material Science Forum*, Trans Tech Publications, Switzerland, vol. 721, pp. 90-95, (2012).

[8] M. Oka and M. Enokizono, "Evaluation of Hysteresis Loss and Eddy-current Loss Induction Motor Stator Cores Using the Excitation Inner Core Method", *USB Proceedings of ICEM2016*, 1688-if-004839, (2016).

[9] M. Oka, T. Ogasawara and M. Enokizono, "Influence Evaluation of Manufacturing Processes on the Magnetic Properties of the Actual Induction Motor Stator Core Using the Stator Winding Excitation Method", *J. of JASAM*, vol. 23, no. 1, pp. 193-198, (2015).

Received 13 February 2018

Mohachiro Oka was born in Oita, Japan, in 1952. He completed graduate school at Oita University in 1999, where he received his Doctorate in Engineering. He is currently a professor in the Department of Information Engineering at the National Institute of Technology, Oita College.

Masato Enokizono was born in Oita, Japan, 1949. He graduated from Kyushu University, School of Engineering and obtained Dr. Degree in 1978. He became a Professor in 1995. He had research scholarship of the Alexander von Humboldt Foundation in Physikalisch-Technische Bundesanstalt