Journal of ELECTRICAL ENGINEERING, VOL 57. NO 8/S, 2006, 48-50

DC TOLERANCE OF CURRENT TRANSFORMERS AND ITS MEASUREMENT

Pavel Mlejnek* — Petr Kašpar

The measurement of energy is one of the most widespread measurements in energetics. The modern electricity meters mostly use the current transformers for current sensing. Two main errors exist in the current transformers: the ratio error and the phase displacement. These errors indirectly depend on amplitude permeability of the ferromagnetic core. The ferromagnetic core may be exposed to the DC magnetic field in the real condition. It causes saturation of the core and consequently rapid decrease of the amplitude permeability. It is important to know what value of magnetic field causes this problem. This article deals with the definition of DC tolerance of current transformers and the method of its measurement. Finally nine samples of current transformers have been measured and their properties have been compared.

Keywords: DC tolerance, current transformer, ratio error, phase displacement

1 INTRODUCTION

The measurement of energy is one of the most widespread measurements in energetics. The electricity meters are installed in all households and in all buildings that are connected to the distribution network. The modern electricity meters mostly use the current transformers (CT's) for current sensing. Two main errors exist in the current transformers: the ratio error and the phase displacement. These errors indirectly depend on amplitude permeability of the ferromagnetic core. The cores of the precision current transformers have amplitude permeability in the order of tens of thousands to hundreds of thousands. This ensures small ratio error and small phase displacement. On the other hand, even very small DC magnetization causes saturation of the core and consequently rapid degradation of permeability and increasing the errors.

One solution of this problem with the DC magnetization is using larger ferromagnetic core. Thus greater primary current is needed to reach the same saturation intensity of magnetic field but large ferromagnetic core is more expensive and enlarges the proportions of the electricity meters. The smarter way of increasing the DC tolerance is using ferromagnetic core with lower amplitude permeability, linear and very narrow hysteresis loop. Then saturation intensity is moved to higher values. The drawback of this approach is a small increase of the ratio error and higher (but almost constant) phase displacement that can be compensated by the external electronic circuits.

This article is not focused on the ratio error and phase displacement as such (see eg. [3,4]) but it deals with great error caused by DC component of measured current. This current occurs when the low resistance (eg. block heater) is powered through a diode.

2 DEFINITION OF DC TOLERANCE

The substitute model of the current transformer (in Fig. 1 [1]) can be used for understanding the DC tolerance. Because transforming ratio p_I of the CT are much greater than one, all secondary parameters must be recalculated to the primary side and these values are marked with apostrophe. Then I_1 and I_2' represent primary and secondary current respectively, R_{Cu1} and R_{Cu2}' are resistances of primary or secondary windings and X_{r1} and X_{r2}' substitute stray field losses. R_b' is burden (sensing) resistance. Resistance R_m represents the core losses and X_m substitutes the main inductance of the transformer.

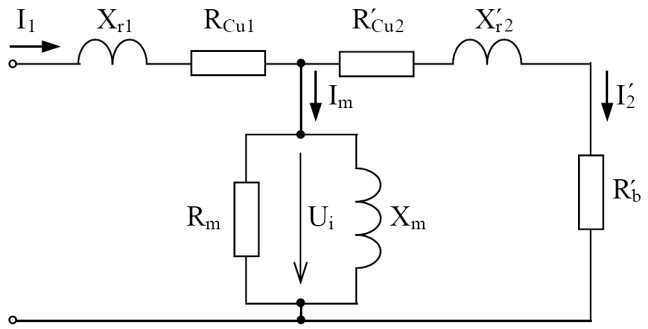

Fig. 1. Substitute model of the current transformer

When the current without DC component flows through primary windings of the transformer it induces magnetic flux in the ferromagnetic core. This magnetic flux is almost compensated by the secondary current because the CT is nearly short circuited due to the high transforming ratio (in most cases 1000 or 2500) and a small resistance on secondary side. Only a small part of primary current is not compensated. It is a magnetizing current (I_m in Fig. 1), which covers losses in the ferromagnetic core. This current causes the errors of the current transformers.

The ratio error ε_I is defined as a difference between amplitude of the secondary current multiplied by transforming ratio p_I and amplitude of the primary current [1]. The phase displacement δ_I is defined as an angle between vectors of primary and secondary currents [1]. Both errors can be expressed as a function of permeability permeability and several others parameters [2]. When the magnetiz-

*Czech Technical University in Prague, Faculty of Electrical Engineering, Department of Measurement, Technická~2, 166~27~Prague~6, Czech Republic, E-mail: mlejnp1@fel.cvut.cz, kaspar@fel.cvut.cz

ISSN 1335-3632 © 2006 FEI STU

ing current generates the intensity of magnetic field in the core almost equal to the saturation intensity then amplitude permeability rapidly degrades and the CT does not work properly. The maximum operating range of the CT is limited by this situation.

In real conditions the core of the CT may be exposed to a DC magnetic field. The DC component of the AC primary current induces no secondary current and therefore all DC current is added to the magnetizing current. It causes shift of the operating point on the hysteresis loop towards saturation. This decreases the operating range because much less magnetizing current is enough to saturate the ferromagnetic material and rapidly to degrade amplitude permeability.

The external magnetic fields from strong permanent magnets cause similar effect of moving the operating point towards saturation.

The electricity meters installed on a public distribution network may be exposed to an AC current with the DC component when some part of load is powered through a diode. Then the current is half-wave rectified and its average value is defined as:

$$I_{avg} = \frac{I_{\max}}{\pi} \quad \text{(A)} \qquad (1)$$

DC tolerance (DC compliance or DC immunity) is defined (according to IEC 61036) as the amplitude (I_{max}) of half-wave rectified current that causes the error of the power measurement greater than predefined error limit. The limits are 3% or 6% for error class 1 or error class 2.

3 MEASUREMENT SETUP AND METHOD

The block diagram (Fig. 2) describes the measurement method and measurement setup.

Two electronic power analysers were used for the DC tolerance measurement according to the definition. The current conversion constant of the second power analyser was set so that both indicated values with the nominal sinusoidal current were the same. Then diodes were connected and current was flowing through an ohmic load R_{load}. The second diode was used only for balancing.

The secondary output of current transformer was burdened with ohmic load as specified in datasheet of used current transformer. The values of the burden were 7.5 Ω or 12.5 Ω according to the current transformers used.

Both analysers measured half-wave rectified current. Next, the DC component of primary current, measured by DC ammeter, was changed from 0 A to approximately 60 A by increasing the amplitude of AC source.

Finally, the error of power measurement on the secondary side was computed. The power error can be expressed as:

$$\delta_W = \frac{P_2 - P_1}{P_1} \cdot 100\% \qquad (2)$$

where P_1 and P_2 is a reading of W_1 and W_2 respectively.

Measured errors were put to the graph in dependence on amplitude of the primary current which was computed from average value (measured by DC ammeter) according to equation (1). The DC tolerance can be determined, from the graph, as the amplitude of current (I_{max}) on a cross point of the curve of the power error and the class line.

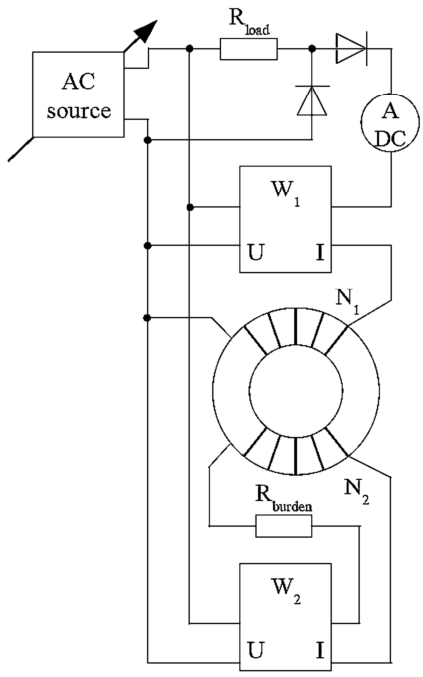

Fig. 2. Block diagram of measurement setup

4 MEASUREMENT RESULTS

Nine samples of the CT's have been used for our measurement. Some of them were complete commercial DC tolerant current transformers with the nanocrystalline cores annealed in perpendicular magnetic field. Some of them were classic (non DC tolerant) current transformers with high permeability cores and rest of them were wound on the commercial low cores that enables the DC tolerance (but the values were unknown).

Table 1: Marking of the used samples of the CT‘s

Sample Nr.	Dimensions (mm) Out D × In D × t	Amplitude permeability	DC toler. (A)
1	22 × 17 × 6.5	1 360	80
2	22 × 17 × 6.9	1 223	100
3	22 × 17.4 × 6.9	1458	100
4	19 × 15 × 6.5	2445	30
5	23.4 × 15.8 × 8.1	754	70 (60)[3]
6	26.5 × 18.8 × 7.8	626	100 (100)[3]
7	26.6 × 18.5 × 6.6 26.6 × 18 × 7.4 [1]	260 000 1 607	130 (80)[3]
8	26.6 × 15 × 10.6 [2]	31 000	5
9	23 × 15.8 × 8.1 [2]	8 324	25

[1] Current transformer consist of two different cores
[2] Dimensions have been estimated
[3] Manufacturer declared the value in parenthesis

The hysteresis loop of the ferromagnetic core of each current transformer was measured before the DC tolerance measurement. Amplitude permeability was calculated from these measurements. Amplitude permeability was calculated at approx. 0.5 T for low permeability cores and at 0.3 T for high permeability cores. Table 1 summarizes dimensions, amplitude permeability and measured DC tolerance (value in parenthesis is specified by manufacturer) of the used current transformers.

Dimensions of some samples have been estimated because the manufacturer did not specify them but the lack of this knowledge affected only calculating of permeability, not the DC tolerance measurement.

After the measurement of DC tolerance the curves of power error were depicted and they are shown in Fig. 3. The DC tolerance can be found out from this graph as the cross point of the class line and the error curve. The values of DC tolerance are enlisted in Tab. 1.

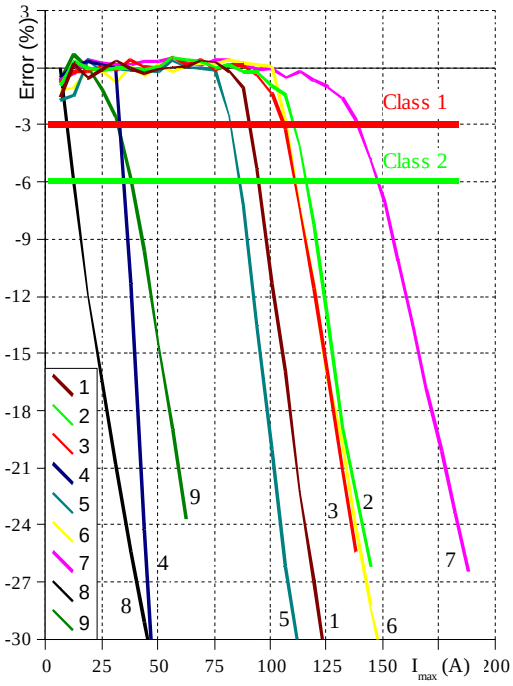

Fig. 3. Graph of the power errors

5 CONCLUSIONS

The method for measurement of DC tolerance has been checked up with nine samples of transformers. This measurement has verified the assumption that the DC tolerance indirectly depends on permeability of ferromagnetic core as can be seen in Table 1.

Samples #4, #8 and #9 have higher permeability then others and their DC tolerance is small. Therefore they are not suitable for electricity meters, because they can measure energy with great error when some electrical appliances are powered though the diode.

Sample #7 is the only exception. It has very high permeability and high DC immunity. The second core that has low permeability and absorbs major part of DC magnetization causes the high DC immunity.

Measured DC tolerance for samples #5, #6 and #7 confirms that DC tolerance is greater than manufacturers declare and these current transformers are suitable for using in electricity meters.

REFERENCES

[1] DRAXLER, K. — KAŠPAR, P. — RIPKA, P.: Magnetic Elements and Measurement (in Czech), CTU Publishing, Prague, (1999), ISBN 80-01-01909-8

[2] DRAXLER, K. — STYBLÍKOVÁ, R.: The Effect of DC Magnetization on the Instrument Current Transformer Error. Journal of Electrical Engineering Vol. 50, No. 8/S (1999), pp. 38– 41.

[3] DRAXLER, K. — STYBLÍKOVÁ, R.: Use of Instrument Current Transformers in Wider Frequency Range, Proc. of IMEKO XV World Congress, Osaka Vol.VI. (1999), pp.113-117.

[4] STYBLÍKOVÁ, R. — DRAXLER, K.: Sources of Additional Errors of the Instrument Current Transformer, Proc. of IMEKO XV World Congress, Osaka Vol. VI. (1999), pp. 1-5.

Received 6 December 2006

Pavel Mlejnek (Ing) was born in 1981 in Polička. He attended the Secondary School of Electrical Engineering in Pardubice in 1995 – 1999. He graduated from CTU-FEE in Prague with an Ing. degree (MSc equivalent) at the Department of Measurement in 2005. The subject of his diploma thesis was “Contactless current measurement device with the anisotropic magnetoresistors”. Currently a PhD student in the Laboratory of Magnetic Measurements, Dept. of Measurement, CTU-FEE in Prague.

Petr Kašpar (Doc, Ing, CSc) was born in 1955 in Prague. He received the Ing. degree (MSc equivalent) in 1981 and CSc (PhD equivalent) in 1988. Since 1999, he is associate professor at the Faculty of Electrical Engineering of Czech Technical University in Prague, Laboratory of Magnetic Measurements. His research interests include PC controlled systems for magnetic measurements, measurements of magnetic disturbances and test of magnetic materials.