Journal of ELECTRICAL ENGINEERING, VOL 57. NO 8/S, 2006, 69-72

SOFTWARE FOR AMORPHOUS MATERIALS SINGLE STRIP TESTERS

Ivan Zemánek*

PC controlled single strip tester (SST) for amorphous magnetic materials laboratory testing based on MMF Czech compensation method was developed. The SST can be used for the measurement of dynamic hysteresis loops of amorphous magnetic materials at arbitrary waveform magnetization up to 20 kHz and for the determination of all important material parameters by the digital processing of digitized measured signals $H(t)$ and $B(t)$. The SST functions are controlled by special user friendly dialogue mode control software developed in Microsoft Visual Studio C++ 6.0 and National Instruments Measurement Studio 6.0 as Windows XP application executable on standard PC completed by three special PC plug-in boards serving as the arbitrary exciting signalgenerator and analogue-digital measuring boards, respectively.

Keywords: amorphous magnetic materials, PC controlled single strip tester, user friendly dialogue mode control software

1 INTRODUCTION

New PC controlled single strip tester (SST) based on the original Czech MMF compensation method [1] was developed at the Czech Technical University in Prague. The SST was designed for the laboratory testing of strips of amorphous materials (thickness 0.02 - 0.04 mm, width 10 – 30 mm) placed in special magnetizing yoke, at AC arbitrary $B(t)$ waveform magnetization in the range of the amplitudes 0 – 1.3 T at frequencies up to 20 kHz. The tester can be also used for the classic soft magnetic materials single strip Epstein testing (thickness 0.3 - 0.5 mm, width 30 mm) or single sheet magnetizing yoke testing (thickness 0.3 - 0.5 mm, width 500 mm) in the range of amplitudes 0 – 2 T at frequencies 50, 60 and 400 Hz. The possible range of the measured magnetic field strength amplitudes is 0 - 10000 A/m.

The SST hardware gives possibility to measure dynamic hysteresis loops for required magnetic flux density waveform and amplitude. The other measured material parameters can be computed from the measured $H(t)$ and $B(t)$ waveforms (amplitude magnetization characteristic, permeability, specific power and specific apparent losses, remanence, coercivity, $H(t)$ RMS, $B(t)$ form factor, etc).

The measuring process, measured signal processing and other SST functions are digitally controlled by the PC via three special plug-in boards, and via SST local control unit (one-chip microprocessor unit) connected with the PC by standard serial USB port. The control and computing software is developed as the Windows XP user friendly dialog mode application using modern Measurement Studio visualization elements. These elements are used for the numerical and boolean SST parameters control, and the measured signals and computed results visualization.

2 SINGLE STRIP TESTER

The SST measuring system (Fig.1) consists of the PC, completed by three special programmable plug-in boards (arbitrary signal generator PC420 and two A/D measuring boards AD14), main SST measuring hardware (electronic fuse EF, magnetizing amplifier MA, measuring amplifier BA, differential measuring amplifier HA, measuring shunt R_b, differential compensation preamplifier RA, compensation amplifier CA, power source S) digitally controlled by the local control unit CTRL connected with the PC via the USB, and magnetizing equipment ME (magnetizing yoke, magnetizing winding MW2-MW1-MW3, voltage winding VW, compensation winding CW1-CW2 and Rogowski-Chattock potentiometer RCP).

The used plug-in boards PC420 and AD14 are directly controlled by the PC. The main SST hardware (power source S, electronic fuse EF, amplifiers MA, BA, CA, measuring shunt R_b) is controlled indirectly by the SST local control microprocessor unit CTRL working under the master PC control (PC directives transmitted by the USB).

The plug-in board PC420 is an arbitrary magnetizing signal generator where the magnetizing signal of the required waveform is digitally synthesized, digital-analogue converted and filtered. The generated analogue magnetizing signal excites the magnetizing amplifier MA of the SST.

The magnetizing signal is switched on by the electronic fuse EF to the digitally controlled magnetizing amplifier MA of the SST. The amplified magnetizing signal excites the magnetizing winding MW2-MW1-MW3 of the magnetizing equipment ME. The central section MW1 of the magnetizing winding covers the strip measured region (between the poles of the Rogowski-Chattock potentiometer RCP). To keep high homogeneity of the magnetic field in the strip measured region, the central section of the magnetizing winding MW1 is completed by two side sections MW2 and MW3 connected in series. The magnetizing current (flowing through the magnetizing winding) is measured as a voltage drop across the shunt R_b amplified by the measuring amplifier HA. If the MMF compensation is fulfilled [1], the waveform of the magnetizing current can be used for direct calculation of the magnetic field strength waveform $H(t)$ in the strip measured region. The sensitivity of the $H(t)$ measurement is given by the shunt resistance digitally controlled by the local control unit CTRL and the PC controlled gain of used AD14 board.

The magnetizing equipment ME is completed by an extra compensation winding consisting of two sections CW1 and CW2 placed near the yoke poles and connected in series. The compensation winding CW1-CW2 is a component of the

*Czech Technical University in Prague, Faculty of Electrical Engineering, Department of Circuit Theory, Technická~2, 166~27~Praha~6, Czech Republic, E-mail: zemanek@fel.cvut.cz

ISSN 1335-3632 © 2006 FEI STU

compensation feedback loop RCP-RA-CA-CW1-CW2-RCP. The voltage induced in the Rogowski-Chattock potentiometer RCP indicates the difference between the magnetomotive force of the central section of the magnetizing winding MW1 (given by the magnetizing current and MW1 turn number) and the magnetic voltage drop across the strip measured region. This difference is mainly given by the magnetic voltage drops across the magnetizing yoke and across the air gaps between the measured strip and yoke poles. Signal from the RCP amplified in the amplifier RA excites compensation amplifier CA. If the compensation current generated by the CA flowing through the compensation winding CW1-CW2 make zero voltage induced in the RCP the magnetic voltage drops across the yoke and air gaps are compensated. The $H(t)$ can be calculated directly from the magnetizing current.

Measuring amplifier BA measures the voltage induced in the voltage winding VW of the magnetizing equipment ME. Using the Faraday's induction law the waveform of the magnetic flux density waveform $B(t)$ is calculated. The sensitivity of the $B(t)$ measurement is determined by the BA amplifier gain digitally controlled by the local control unit CTRL and the PC controlled gain of used AD14 board.

The SST functions are controlled by the PC. Some of these functions are executed by the local control unit CTRL under the PC control. The CTRL is a simple SST hardware dependent one-chip microcomputer system that executes the directives of the PC. The CTRL unit directly controls the SST power source S, electronic fuse EF, gains of the MA, BA and CA amplifiers, and R_b resistance. The local control unit CTRL also self tests its correct function (watch-dog) and transmits the SST hardware status (power source "on/off", electronic fuse "on/off" and prospective watch-dog reset) to the PC, where the CTRL status information is immediately processed and evaluated.

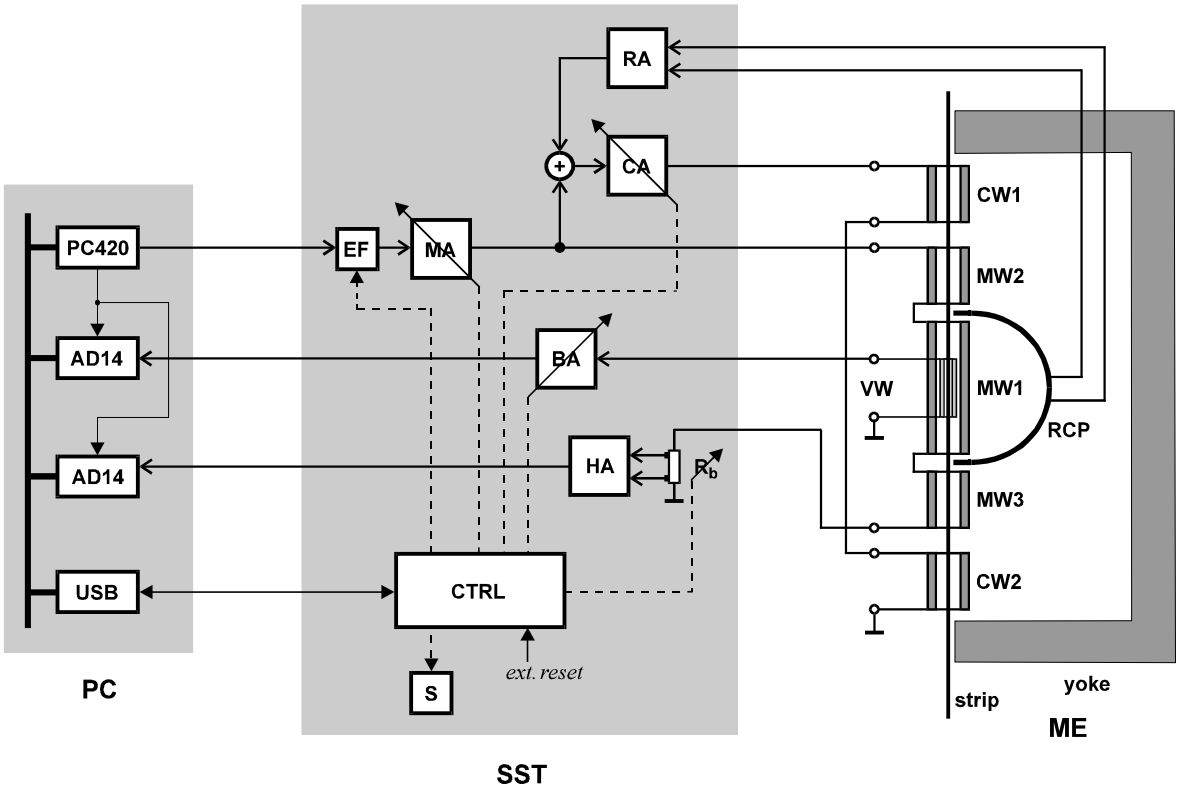

Fig. 1. Block diagram of the SST measuring system

3 CONTROL SOFTWARE

The control software was developed as the Windows XP application executable on standard PC completed by the PC420 arbitrary signal generator plug-in board and two AD14 analogue-digital measuring plug-in boards. The used program environment was Microsoft Visual Studio C++ 6.0 and National Instruments Measurement Studio 6.0.

The control software concept is based on user friendly dialogue mode. There is one main object – main dialogue window consisting of many other small objects – control, editing and indicating elements (buttons, numerical and boolean controls, indicators, knobs and graphs). The small objects serve as the simple system inputs and outputs. All these objects (their member functions – methods and member variables) are also methods and member variables of the main object. In this case all methods and variables can be used as "public" ones (usable for all system functions and procedures).

The most system functions are hardware independent. The interface to the SST hardware layer is given by the DLL firmware of used plug-in boards PC420 and AD14. The modified control software for the serial line RS232 is used as the interface to the USB serial port.

The main control program dialogue window is in Fig.2. The dialog window consists of eight editing and indicating

element groups that offer simple communication with the SST and visualization of all measured and computed results.

3.1 Magnetizing signal

The magnetizing signal *amplitude* (expressed by required magnetic flux density amplitude) and the magnetizing signal *frequency* are controlled by the numerical edit controls **Ba_r** and **F**, respectively. The set *amplitude* of the magnetizing signal is indicated by the indicate knob (meter) **Ba_r (T)** and the *waveform* and *percentage amplitude* of the digital prototype of the magnetizing signal is indicated by the graph **Digital prototype (%)**.

3.2 Magnetizing yoke

The magnetizing yoke parameters, ie *turns number* N1 of the magnetizing winding central section, *turns number* N2 of the voltage winding and *length* of the measured region Lm of the measured material, are set and visualized by the numerical edit controls **N1**, **N2** and **Lm (mm)**, respectively.

3.3 Measured material

The measured material *identification number*, *density*, *width* and *thickness* are set and visualized by the numerical edit controls **Material Nr.**, **Density (kg/m^3)**, **Width (mm)** and **Thickness (mm)**, respectively.

3.4 Measurement

The measurement *start* and *stop* are controlled by the control buttons **MEAS** and **STOP**, respectively. The boolean ON/OFF indicator signalizes the measurement *status*.

3.5 Main measurement results

The main measurement results - *amplitudes* of the *magnetic field strength* Ha and *magnetic flux density* Ba, and the *specific power losses* p - are displayed on the indicate knobs and numerical indicate controls **Ha (A/m)**, **Ba (T)**, and **p (W/kg)**, respectively. The graphs **H (A/m)**, **B (T)** and **Hysteresis loop** display the measured 500-point $H(t)$ and $B(t)$ *waveforms* and *hysteresis loop*. Two boolean edit controls **range_H** and **range_B** are used for the HA and BA amplifiers *gain control*.

3.7 Calibration and result correction

The measurement *accuracy* can be increased by the SST calibration and additional correction of the measured magnetic field strength amplitude and specific power losses. The *correction constants* can be set by the numerical edit controls **Corr_H** and **Corr_p**.

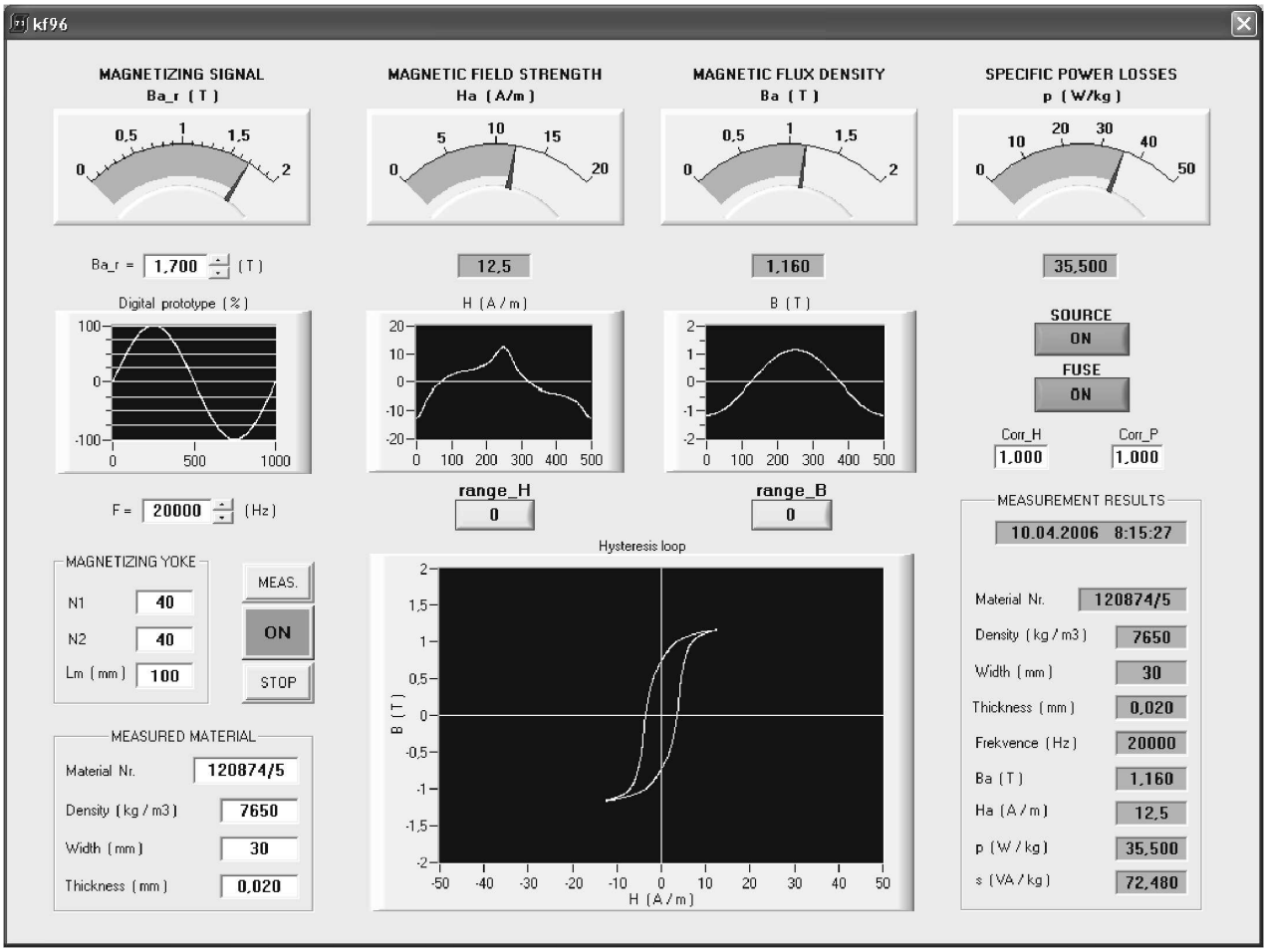

Fig. 2. Control program dialogue window

3.8 Measurement results set

The results of the measurement are displayed by eleven numerical indicate controls. This *set of results* consists of measurement date and time, measured material parameters (identification number, density, width and thickness),magnetizing signal frequency, magnetic flux density and magnetic field strength amplitudes, specific power losses and specific apparent losses.

4 LOCAL CONTROL UNIT SOFTWARE

The local control unit CTRL is a classic one-chip 8051 family microprocessor system connected with the PC by the USB serial port (Fig.1). The software for the microprocessor was developed in the 8051 assembler and C language. The CTRL control function consists in the decoding and executing of the PC directives – PC commands. After the reset the CTRL program cycles in the infinite program loop. If any PC command is received the CTRL decodes this command and immediately executes it. Then the program returns back to the infinite loop. The CTRL program can be restarted by reset only.

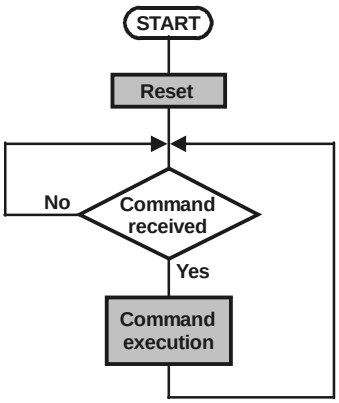

Fig. 3. Flow diagram of the CTRL program

The PC commands and responsible CTRL functions are coded (ASCII) by the capitals A – Z (Table 1).

Table 1. PC command codes and CTRL control functions

Command code	Control function
A	Serial line check
B	B,M-channel gain “low”
C	B,M- channel gain “high”
G	H- channel gain “high”
H	H- channel gain “low”
I	Electronic fuse “on”
O	Electronic fuse “off”
R	Program reset
S	Get SST status
V	Power source “off”
X	Compensation channel gain “low”
Y	Compensation channel gain “high”
Z	Power source “on”

The block diagram of the CTRL control functions in the SST are shown in Fig. 4.

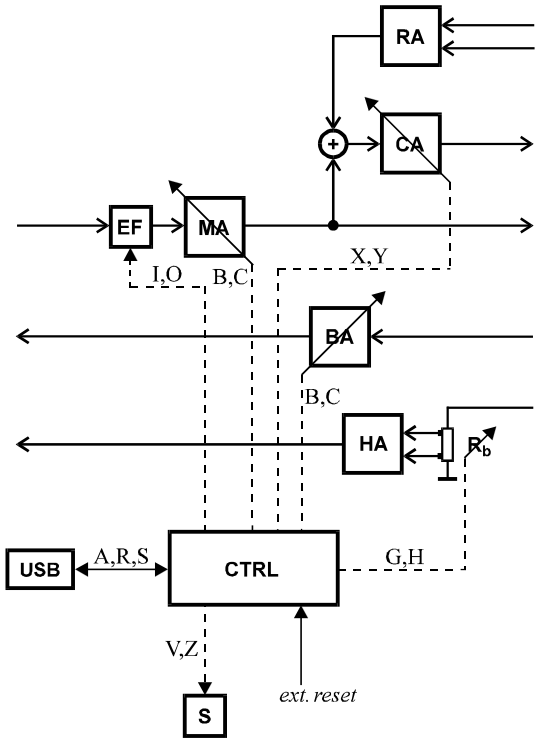

Fig. 4. Block diagram of the CTRL control functions

5 CONCLUSIONS

The user friendly dialogue mode control software for new amorphous magnetic materials SST was developed at the Czech Technical University in Prague. The software was developed in Microsoft Visual Studio C++ 6.0 and National Instruments Measurement Studio 6.0 as the Windows XP application executable on standard PC completed by three special PC plug-in boards (PC420, 2xAD14). The development of the SST software was supported by the research program No. MSM6840770015 Research of Methods and Systems for Measurement of Physical Quantities and Measured Data Processing of the CTU in Prague sponsored by the Ministry of Education, Youth and Sports of the Czech Republic.

REFERENCES

[1] ZEMÁNEK, I.: Measuring and Control System for On-line Strip Testing. Proc. of the AMTEE’05 Conference, Pilsen (2005) D81.

Received 15 December 2006

Ivan Zemánek (Doc, Ing, CSc), born in Příbram, Czech Republic, in 1952. Graduated (Ing) from the Faculty of Electrical Engineering, Czech Technical University, Prague, in Radioelectronics, in 1977, received CSc (PhD) degree in Radioelectronics, in 1983, and Doc (Assoc.Prof.) degree in Theoretical Electrical Engineering, in 1995. At present he is an associate professor at the Department of Circuit Theory. The main field of his research and teaching activities are the circuit theory, and digital signal processing.