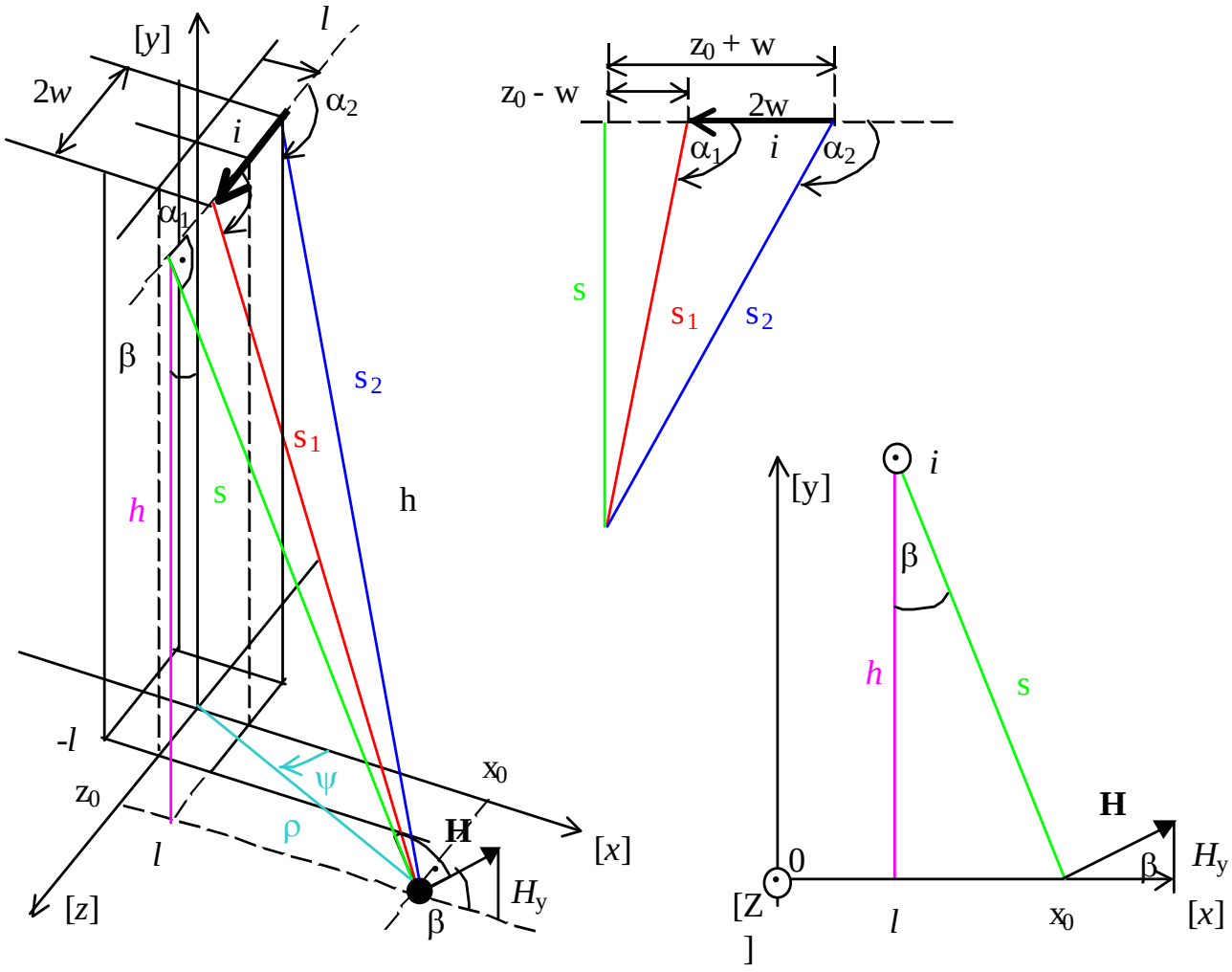

The field from a line of length $2w$ - using Biot-Savart law

$$H = \frac{i}{4\pi s}(\cos\alpha_1 - \cos\alpha_2),\ s^2 = (x_0 - l)^2 + h^2,\ \sin\beta = \frac{x_0 - l}{s}\quad \cos\beta = \frac{h}{s}$$

$$H_y = H\sin\beta = \frac{i(x_0 - l)}{4\pi s^2}(\cos\alpha_1 - \cos\alpha_2)$$

$$H_x = H\cos\beta = \frac{ih}{4\pi s^2}(\cos\alpha_1 - \cos\alpha_2)$$

$$\cos\alpha_1 = \frac{w - z_0}{s_1} = \frac{w - z_0}{\sqrt{(w - z_0)^2 + s^2}} = \frac{w - z_0}{\sqrt{(w - z_0)^2 + (x_0 - l)^2 + h^2}},$$

$$\cos\alpha_2 = \frac{-w - z_0}{s_2} = \frac{-w - z_0}{\sqrt{(w + z_0)^2 + s^2}} = \frac{-w - z_0}{\sqrt{(w + z_0)^2 + (x_0 - l)^2 + h^2}}$$

for $w \to \infty\ \ \alpha_1 \to 0, \alpha\ \to \pi)$

$$H_y^{\infty} = H^{\infty}\sin\beta = \frac{i(x_0 - l)}{2\pi s^2},\ H_x^{\infty} = H^{\infty}\cos\beta = \frac{ih}{2\pi s^2}\ \text{ and }\ H^{\infty} = \frac{i}{2\pi s}$$